"ORIGINAL"

# State of Nebraska - INVITATION TO BID CONTRACT

Return to:
State Purchasing Bureau
1526 K Street, Suite 130
Lincoln, Nebraska 68508

Telephone: 402-471-6500
Fax: 402-471-2089

| | | | |
|---|---|---|---|
| **Date** | 5/20/20 | **Page** | 1 of 2 |
| **Solicitation Number** | 6307 OF | | |
| **Opening Date and Time** | 06/09/20 | 2:00 pm | |
| **Buyer** | CHRISTIE KELLY (AS) | | |

**DESTINATION OF GOODS**
**DEPARTMENT OF TRANSPORTATION**
**5001 S 14TH ST**
**PO BOX 94759**
**LINCOLN NE 68509-4759**

Per Nebraska' s Transparency in Government Procurement Act, DAS is required to collect statistical information regarding the number of contracts awarded to Nebraska contractors. This information is for statistical purposes only and will not be considered for contract award purposes.

✓ NEBRASKA CONTRACTOR AFFIDAVIT: Bidder hereby attests that bidder is a Nebraska Contractor. " Nebraska Contractor" shall mean any bidder who has maintained a bona fide place of business and at least one employee within this state for at least the six (6) months immediately preceding the posting date of this ITB.

_____ I hereby certify that I am a Resident disabled veteran or business located in a designated enterprise zone in accordance with Neb. Rev. Stat. §73-107 and wish to have preference, if applicable, considered in the award of this contract.

Contract to supply and deliver Truck Tractor Chassis with Tandem Rear Axle to the State of Nebraska as per the attached specifications for a two (2) year period from date of award. The contract may be renewed for two (2) additional two (2) year periods when mutually agreeable to the vendor and the State of Nebraska.

(05/18/20 ml)

## INVITATION

| Line | Description | Quantity | Unit of Measure | Unit Price | Extended Price |
|---|---|---|---|---|---|
| 1 | **TRUCK TRACTOR CHASSIS WITH** TANDEM REAR AXLE | 2.0000 | EA | 96,576.00 | 193,152.00 |
| 2 | **FRONT TOW HOOKS** | 2.0000 | EA | 109.00 | 218.00 |
| 3 | **ENGINE BRAKE** | 2.0000 | EA | STD | N/C |
| 4 | **PTO DRIVEN HYDRAULIC WET KIT W** W/30 GALLON TANK ON PASSENGER 2-LINE W/hoses and Fittings. | 2.0000 | EA | 10,933.00 | 21,866.00 |
| 5 | **HALF FENDERS** | 2.0000 | EA | 1,370.00 | 2,740.00 |

## BIDDER MUST COMPLETE THE FOLLOWING

DISCOUNT PAYMENT TERMS: Net % 30 DAYS

By signing this Invitation to Bid form, the bidder guarantees compliance with the provisions stated in this Invitation to Bid, agrees to the terms and conditions unless otherwise agreed to (see Section III) and certifies that bidder maintains a drug free work place environment. Vendor will furnish the items requested within 75-110 days after receipt of order. Failure to enter Delivery Date may cause quotation to be REJECTED.

**Sign Here** (Authorized Signature MANDATORY - MUST BE SIGNED IN INK)

**VENDOR#**

**VENDOR:** Truck Center Companies

**Address:** 14321 Cornhusker Rd.
Omaha, Ne. 68138

Enter Contact Information Below

**Contact** Terry Novotny

**Telephone** 402 740 4986

**Facsimile** 402 592 9641

**Email** tnovotny@truckcentercompanies.com

# State of Nebraska - INVITATION TO BID CONTRACT

Return to:
State Purchasing Bureau
1526 K Street, Suite 130
Lincoln, Nebraska 68508

Telephone: 402-471-6500
Fax: 402-471-2089

| | | | |
|---|---|---|---|
| **Date** | 5/20/20 | **Page** | 2 of 2 |
| **Solicitation Number** | 6307 OF | | |
| **Opening Date and Time** | 06/09/20 | 2:00 pm | |
| **Buyer** | CHRISTIE KELLY (AS) | | |

**DESTINATION OF GOODS**
**DEPARTMENT OF TRANSPORTATION**
**5001 S 14TH ST**
**PO BOX 94759**
**LINCOLN NE 68509-4759**

## INVITATION

| Line | Description | Quantity | Unit of Measure | Unit Price | Extended Price |
|---|---|---|---|---|---|
| 6 | **FIXED ROOF FAIRINGS AND CAB** EXTENDERS | 2.0000 | EA | 1963.00 | 3,926.00 |
| 7 | **13 SPEED TRANSMISSION TO MATCH** ENGINE HP & TORQUE | 2.0000 | EA | 3,289.00 | 6,578.00 |
| 8 | **18 SPEED TRANSMISSION TO MATCH** ENGINE HP & TORQUE | 2.0000 | EA | 3,692.00 | 7,384.00 |
| 9 | **EATON FULLER ULTRASHIFT** OR OEM EQUIVALENT AUTOSHIFT TR | 2.0000 | EA | 7,158.00 | 14,316.00 |
| 10 | **EXTENDED WHEEL BASE W/MIN** 12,000 LB PUSHER AXLE | 2.0000 | EA | 8,564.00 | 17,128.00 |
| 11. | Allison Automatic 4700 RDS Top. ILO 10sp MANUAL | 2.000 | EA | 13,682.00 | 27,364.00 |
| 12. | 505 HP, 1850 Torque DD13 470 HP, 1650 - SAME COST | 2.000 | EA | 1,380.00 | 2,760.00 |
| 13. | Pusher Axle Fenders installed | 2.000 | EA | 1350.00 | 2,700.00 |

# ADDENDUM ONE
# QUESTIONS and ANSWERS

Date: 06/02/20

To: All Bidders

From: Christie Kelly, Buyer
AS Materiel State Purchasing Bureau (SPB)

RE: Addendum for Invitation to Bid (ITB) Number 6307 OF, Truck Tractor Chassis with Tandem Rear Axle, to be opened June 9, 2020 at 2:00 P.M Central Time

1. Following are the questions submitted and answers provided for the above-mentioned Invitation to Bid. The questions and answers are to be considered as part of the Invitation to Bid. It is the Bidder's responsibility to check the SPB website for all Addenda or Amendments.

| Question Number | Question | State Response |
|---|---|---|
| 1 | Do you have specs that you are requiring for the wet kit? There are a lot of variables that go into them. | Pump shall have a minimum of 22 GPM/2,000 PSI.<br><br>Hoses must be of adequate length to reach the trailer with couplers.<br><br>The wet kit must have the ability to use with sliding axle trailers. |
| 2 | do you have any specs on the half fenders? | No. All units have half fenders and may vary from model to model. |
| 3 | Do you anticipate extending the bid due date? | No, not at this time.<br><br>Per Section I. Procurement Procedure, Subsection H. Submission of Bids: "It is the responsibility of the Bidder to check the website for all information relevant to this ITB to include Addenda and/or Amendments issued prior to the Opening Date".<br><br>Website address is as follows:<br>http://das.nebraska.gov/materiel/purchasing.html |
| 4 | What additional details are you willing to provide, if any, beyond what is stated in bid documents concerning how you will identify the winning bid? | No additional details to be provided.<br><br>Please see Section I Procurement Procedure, Subsection R-Award, for the process of identifying the winning bid(s).<br><br>Website address is as follows:<br>http://das.nebraska.gov/materiel/purchasing.html |
| 5 | Was this bid posted to the nationwide free bid notification website at<br><br>https://gcc02.safelinks.protection.outlook.com/?url=http%3A%2F%2Fwww.mygovwatch.com%2F&data=02%7C01%7Cchristina.kelly%40nebraska.gov%7Cb1f0398ad04c4ab2a03108d80252d3b5%7C043207dfe6894bf6902001038f11f0b1%7C0%7C0%7C637261902041601175&sdata=cTA%2F7Sc4LKH2w5zSSPv%2FkDBEsxRcNICISNkJwdVXSxw%3D&reserved=0? | The State of Nebraska only uses the State Purchasing Bureau (SPB) website to post State of Nebraska Bid Opportunities.<br><br>Website address is as follows:<br>http://das.nebraska.gov/materiel/purchasing.html |

| | | |
|---|---|---|
| 6 | Other than your own website, where was this bid posted? | The State of Nebraska only uses the State Purchasing Bureau (SPB) website to post State of Nebraska Bid Opportunities.<br><br>Website address is as follows:<br>http://das.nebraska.gov/materiel/purchasing.html |
| 7 | when and how answers will be provided | Per Section I. Procurement Procedure, Subsection C. Schedule of Events: Number 3 and Subsection D. Written Questions and Answers:<br><br>Written answers will be posted, per the Schedule of Events.<br><br>Website address is as follows:<br>http://das.nebraska.gov/materiel/purchasing.html |
| 8 | Line 4 - PTO driven hydraulic wet kit / How many lines will you require? | One (1) Pressure Line and one (1) Return Line are required. |
| 9 | Line 5 – Half Fenders / Are poly fenders the preferred and acceptable? | Poly fenders are acceptable. |
| 10 | Line 10 – Do you want fenders on the pusher axle? If yes are poly acceptable? | Yes, fenders shall be on the pusher axle. Poly fenders are acceptable. |
| 11 | N/2 – Tires / Is it acceptable to have mixed brands due to the front tires being 12R22.5 and the rear tires being 11R22.5? | Yes, tires may be a mix of the specified brands stated in Section VI-Technical Specifications, Subsection N-Tires, Number 2. |
| 12 | O/2/a – Seats / the seat we use is manufactured by National, is it acceptable? | Per Section VI-Technical Specifications, Subsection O-Cab, Number 2:<br><br>Seats shall be National Brand Model 2000 series or OEM Equivalent.<br><br>If bidding an Equivalent specify the Brand Name and Model being bid in Subsection O, Number 2, a. |
| 13 | F/9 – Inter axle wheel lock. Do you want this on the front, the rear or both axles? | Inter axle wheel locks shall be on both the front and rear axles. |

**2. The Language in Section VI, Subsection I, Number 2 is hereby superseded and replaced by:**

| | | | |
|---|---|---|---|
| | | | **2.** National Brand Model 2000 series or OEM Equivalent Seats: |
| | | | **a.** Equivalent Brand/Model bid must be approved by NDOT<br><br>**Specify Brand/Model Being Bid:**<br><br>_____ |

This Addendum will become part of the ITB and should be acknowledged with the Invitation to Bid.

# INVITATION TO BID

## Number 6307 OF

The State of Nebraska (State), Department of Administrative Services (DAS), Materiel Division, State Purchasing Bureau (SPB), is issuing this solicitation for a Commodity contract, ITB Number 6307 OF for the purpose of selecting a qualified Contractor to provide **Truck Tractor Chassis with Tandem Rear Axle**. A more detailed description can be found in Sections II through VI. The resulting contract may not be an exclusive contract as the State reserves the right to contract for the same or similar goods from other sources now or in the future.

**INFORMATION PERTINENT TO THIS SOLICITATION CAN BE FOUND ON THE INTERNET AT:**
http://das.nebraska.gov/materiel/purchasing.html

**IMPORTANT NOTICE**: Pursuant to Neb. Rev. Stat. § 84-602.02, State contracts in effect as of January 1, 2014, and contracts entered into thereafter, must be posted to a public website. The resulting contract, the solicitation, and the successful Contractor's Bid or response will be posted to a public website managed by DAS, which can be found at:

https://statecontracts.nebraska.gov

In addition and in furtherance of the State's public records statute (Neb. Rev. Stat. § 84-712 et seq.) all Bids or responses received regarding this solicitation will be posted to the SPB website.

These postings will include the entire Bid or response. Contractor must request that proprietary information be excluded from the posting. The Contractor must identify the proprietary information, mark the proprietary information according to state law, and submit the proprietary information in a separate container or envelope marked conspicuously using an indelible method with the words "PROPRIETARY INFORMATION". The Contractor must submit a **detailed written document showing** that the release of the proprietary information would give a business advantage to named business competitor(s) and explain how the named business competitor(s) will gain an actual business advantage by disclosure of information. The mere assertion that information is proprietary or that a speculative business advantage might be gained is not sufficient. (See Attorney General Opinion No. 92068, April 27, 1992) **THE CONTRACTOR MAY NOT ASSERT THAT THE ENTIRE BID OR RESPONSE IS PROPRIETARY. COST WILL NOT BE CONSIDERED PROPRIETARY AND IS A PUBLIC RECORD IN THE STATE OF NEBRASKA.** The State will then determine, in its discretion, if the interests served by nondisclosure outweighs any public purpose served by disclosure. (See Neb. Rev. Stat. § 84-712.05(3)) The Contractor will be notified of the Agency's decision. Absent a State determination that information is proprietary, the State will consider all information a public record subject to release regardless of any assertion that the information is proprietary.

If the Agency determines it is required to release proprietary information, the Contractor will be informed. It will be the Contractor's responsibility to defend the Contractor's asserted interest in non-disclosure.

To facilitate such public postings, with the exception of proprietary information, the State of Nebraska reserves a royalty-free, nonexclusive, and irrevocable right to copy, reproduce, publish, post to a website, or otherwise use any contract, Bid, or response to this solicitation for any purpose, and to authorize others to use the documents. Any individual or entity awarded a contract, or who submits a Bid or response to this solicitation, specifically waives any copyright or other protection the contract, Bid, or response to the solicitation may have; and, acknowledges that they have the ability and authority to enter into such waiver. This reservation and waiver is a prerequisite for submitting a Bid or response to this solicitation, and award of a contract. Failure to agree to the reservation and waiver will result in the Bid or response to the solicitation being found non-responsive and rejected.

**Any entity awarded a contract or submitting a Bid or response to the solicitation agrees not to sue, file a claim, or make a demand of any kind, and will indemnify and hold harmless the State and its employees, volunteers, agents, and its elected and appointed officials from and against any and all claims, liens, demands, damages, liability, actions, causes of action, losses, judgments, costs, and expenses of every nature, including investigation costs and expenses, settlement costs, and attorney fees and expenses, sustained or asserted against the State, arising out of, resulting from, or attributable to the posting of the contract or the Bids and responses to the solicitation, awards, and other documents.**

# TABLE OF CONTENTS


**INVITATION TO BID** ..... i

**TABLE OF CONTENTS** ..... ii

**GLOSSARY OF TERMS** ..... iv

**ACRONYM LIST** ..... viii

**I. PROCUREMENT PROCEDURE** ..... 1

A. GENERAL INFORMATION ..... 1
B. PROCURING OFFICE AND COMMUNICATION WITH STATE STAFF AND EVALUATORS ..... 1
C. SCHEDULE OF EVENTS ..... 1
D. WRITTEN QUESTIONS AND ANSWERS ..... 2
E. SECRETARY OF STATE/TAX COMMISSIONER REGISTRATION REQUIREMENTS (Statutory) ..... 2
F. ETHICS IN PUBLIC CONTRACTING ..... 2
G. DEVIATIONS FROM THE ITB ..... 2
H. SUBMISSION OF BIDS ..... 2
I. BID PREPARATION COSTS ..... 3
J. FAILURE TO COMPLY WITH ITB ..... 3
K. BID CORRECTIONS ..... 3
L. LATE BIDS ..... 3
M. BID OPENING ..... 3
N. ITB/BID REQUIREMENTS ..... 4
O. EVALUATION OF BIDS ..... 4
P. BEST AND FINAL OFFER ..... 4
Q. REFERENCE AND CREDIT CHECKS ..... 5
R. AWARD ..... 5
S. SPECIFICATIONS ..... 5
T. ALTERNATE/EQUIVALENT BIDS ..... 5
U. LUMP SUM OR "ALL OR NONE" BIDS ..... 6
V. EMAIL SUBMISSIONS ..... 6
W. BID TABULATIONS ..... 6
X. REJECTION OF BIDS ..... 6
Y. RESIDENT BIDDER ..... 6

**II. TERMS AND CONDITIONS** ..... 7

A. GENERAL ..... 7
B. NOTIFICATION ..... 7
C. NOTICE (BUYER'S REPRESENTATIVE) ..... 8
D. GOVERNING LAW (Statutory) ..... 8
E. AMENDMENT ..... 8
F. CHANGE ORDERS OR SUBSTITUTIONS ..... 8
G. VENDOR PERFORMANCE REPORT(S) ..... 8
H. NOTICE OF POTENTIAL CONTRACTOR BREACH ..... 9
I. BREACH ..... 9
J. NON-WAIVER OF BREACH ..... 9
K. SEVERABILITY ..... 9
L. INDEMNIFICATION ..... 10
M. ATTORNEY'S FEES ..... 10
N. ASSIGNMENT, SALE, OR MERGER ..... 10
O. CONTRACTING WITH OTHER POLITICAL SUB-DIVISIONS OF THE STATE OR ANOTHER STATE ..... 10
P. FORCE MAJEURE ..... 11
Q. CONFIDENTIALITY ..... 11
R. EARLY TERMINATION ..... 11
S. CONTRACT CLOSEOUT ..... 12

**III. CONTRACTOR DUTIES** ..... 13

A. INDEPENDENT CONTRACTOR / OBLIGATIONS ..... 13
B. EMPLOYEE WORK ELIGIBILITY STATUS ..... 13
C. COMPLIANCE WITH CIVIL RIGHTS LAWS AND EQUAL OPPORTUNITY EMPLOYMENT / NONDISCRIMINATION (Statutory) ..... 14
D. COOPERATION WITH OTHER CONTRACTORS ..... 14

E. DISCOUNTS ..... 14
F. PRICES ..... 14
G. COST CLARIFICATION ..... 14
H. PERMITS, REGULATIONS, LAWS ..... 15
I. NOTICE OF POTENTIAL CONTRACTOR BREACH ..... 15
J. ANTITRUST ..... 15
K. CONFLICT OF INTEREST ..... 15
L. ADVERTISING ..... 16
M. DISASTER RECOVERY/BACK UP PLAN ..... 16
N. DRUG POLICY ..... 16
O. WARRANTY ..... 16

**IV. PAYMENT ..... 17**

A. PROHIBITION AGAINST ADVANCE PAYMENT (Statutory) ..... 17
B. TAXES (Statutory) ..... 17
C. INVOICES ..... 17
D. INSPECTION AND APPROVAL ..... 17
E. PAYMENT (Statutory) ..... 17
F. LATE PAYMENT (Statutory) ..... 17
G. SUBJECT TO FUNDING / FUNDING OUT CLAUSE FOR LOSS OF APPROPRIATIONS (Statutory) ..... 17
H. RIGHT TO AUDIT ..... 18

**V. SCOPE OF WORK ..... 19**

A. SCOPE ..... 19

**VI. TECHNICAL SPECIFICATIONS ..... 20**

A. BIDDER INSTRUCTIONS ..... 20
B. NON-COMPLIANCE STATEMENT ..... 20
C. BASIC SPECIFICATIONS ..... 20
D. TRANSMISSION AND CLUTCH ..... 21
E. SHOCK ABSORBERS ..... 21
F. AXLES AND SPRINGS ..... 22
G. STEERING ..... 22
H. BRAKES ..... 22
I. ENGINE ..... 23
J. FILTERS ..... 24
K. COOLING ..... 24
L. FUEL TANKS ..... 24
M. WHEELS ..... 25
N. TIRES. ..... 25
O. CAB ..... 26
P. COLOR ..... 27
Q. MIRRORS ..... 27
R. LIGHTS ..... 27
S. CONTROLS AND INSTRUMENTS ..... 27
T. WINDSHIELD WIPERS ..... 28
U. ELECTRICAL ..... 28
V. FIFTH WHEEL ASSEMBLY ..... 29
W. GENERAL ..... 29
X. RADIO FREQUENCY SHIELDING – Caution !! ..... 29
Y. WARRANTY ..... 30
Z. SERVICE ..... 31
AA. MANUALS ..... 31
BB. SPECIFICATION FORM ..... 31
CC. DELIVERY LOCATIONS, INSTRUCTIONS AND PAYMENT ..... 32
DD. MOTOR VEHICLE INDUSTRIES REGULATION ACT ..... 32
EE. ANNUAL USAGE, ESTIMATED ..... 32
FF. USAGE REPORT ..... 33
GG. DELIVERY ARO ..... 33
HH. ORDERS ..... 33
II. QUALITY ..... 34
JJ. AUTHORIZED DEALER & WARRANTY ..... 34

# GLOSSARY OF TERMS

**Acceptance Test Procedure**: Benchmarks and other performance criteria, developed by the State or other sources of testing standards, for measuring the effectiveness of products or goods and the means used for testing such performance.

**Addendum:** Something to be added or deleted to an existing document; a supplement.

**Agency**: Using Agencies shall mean and include all officers of the state, departments, bureaus, boards, commissions, councils, and institutions receiving legislative appropriations.

**Agent/Representative:** A person authorized to act on behalf of another.

**Amend:** To alter or change by adding, subtracting, or substituting.

**Amendment:** A written correction or alteration to a document.

**Appropriation:** Legislative authorization to expend public funds for a specific purpose. Money set apart for a specific use.

**Automated Clearing House:** Electronic network for financial transactions in the United States.

**Award:** All purchases, leases, or contracts which are based on competitive Bids will be awarded according to the provisions in the solicitation.

**Best and Final Offer:** In a competitive Bid, the final offer submitted which contains Contractor's most favorable terms for price.

**Bid:** An offer, bid, or quote submitted by a Contractor/vendor in a response to a written solicitation.

**Bidder:** A Contractor who submits an offer Bid in response to a written solicitation.

**Breach:** Violation of a contractual obligation by failing to perform or repudiation of one's own promise.

**Business:** Any corporation, partnership, individual, sole proprietorship, joint-stock company, joint venture, or any other private legal entity.

**Business Day:** Any weekday, except State-recognized holidays.

**Calendar Day:** Every day shown on the calendar including Saturdays, Sundays, and State/Federal holidays.

**Cancellation:** To call off or revoke a Bid, purchase order or contract without expectation of conducting or performing at a later time. Contractor

**Collusion**: An agreement or cooperation between two (2) or more persons or entities to accomplish a fraudulent, deceitful, or unlawful purpose.

**Commodities**: Any equipment, material, supply or goods; anything movable or tangible that is provided or sold.

**Commodities Description:** Detailed descriptions of the items to be purchased; may include information necessary to obtain the desired quality, type, color, size, shape, or special characteristics necessary to perform the work intended to produce the desired results.

**Competition:** The effort or action of two (2) or more commercial interests to obtain the same business from third parties.

**Confidential Information**: Unless otherwise defined below, "Confidential Information" shall also mean proprietary trade secrets, academic and scientific research work which is in progress and unpublished, and other information which if released would give advantage to business competitors and serve no public purpose (see Neb. Rev. Stat. § 84-712.05(3)). In accordance with Nebraska Attorney General Opinions 92068 and 97033, proof that information is proprietary requires identification of specific, named competitor(s) who would be advantaged by release of the information and the specific advantage the competitor(s) would receive.

**Contract:** An agreement between two (2) or more parties creating obligations that are enforceable or otherwise recognizable at law; the writing that sets forth such an agreement.

**Contract Administration:** The management of the contract which includes and is not limited to contract signing, contract amendments and any necessary legal actions.

**Contract Management:** The management of day to day activities at the Agency which includes and is not limited to ensuring deliverables are received, specifications are met, handling meetings and making payments to the Contractor.

**Contract Period:** The duration of the contract.

**Contractor:** An individual or entity lawfully conducting business in the State, who seeks or agrees to provide goods or services under the terms of a written contract.

**Cooperative Purchasing:** The combining of requirements of two or more political entities to obtain advantages of volume purchases, reduction in administrative expenses or other public benefits.

**Copyright:** A property right in an original work of authorship fixed in any tangible medium of expression, giving the holder the exclusive right to reproduce, adapt and distribute the work.

**Critical Program Error:** Any Program Error, whether or not known to the State, which prohibits or significantly impairs use of the Licensed Software as set forth in the documentation and intended in the contract.

**Customer Service:** The process of ensuring customer satisfaction by providing assistance and advice on those products or goods provided by a Contractor.

**Default:** The omission or failure to perform a contractual duty.

**Deviation**: Any proposed change(s) or alteration(s) to either the terms and conditions or deliverables within the scope of the written solicitation or contract.

**Evaluation:** The process of examining an offer after opening to determine the Contractor's responsibility, responsiveness to requirements, and to ascertain other characteristics of the offer that relate to determination of the successful award.

**Evaluation Committee**: Committee(s) appointed by the requesting Agency that advises and assists the procuring office in the evaluation of Bids (offers made in response to written solicitations).

**Extension:** Continuance of a contract for a specified duration upon the agreement of the parties beyond the original Contract Period. Not to be confused with "Renewal Period".

**Free on Board Destination:** The delivery charges are included in the quoted price and prepaid by the Contractor. Contractor is responsible for all claims associated with damages during delivery of product.

**Free on Board Point of Origin**: The delivery charges are not included in the quoted price and are the responsibility of the Agency. Agency is responsible for all claims associated with damages during delivery of product.

**Foreign Corporation:** A foreign corporation that was organized and chartered under the laws of another state, government, or country.

**Installation Date:** The date when the procedures described in "Installation by Contractor", and "Installation by State", as found in the solicitation, or contract are completed.

**Interested Party:** A person, acting in their personal capacity, or an entity entering into a contract or other agreement creating a legal interest therein.

**Invalid Bid:** A Bid that does not meet the requirements of the solicitation or cannot be evaluated against the other Bids.

**Invitation to Bid:** A written solicitation utilized for obtaining competitive offers for Services or Goods.

**Late Bid:** An offer received after the Opening Date and Time.

**Licensed Software Documentation:** The user manuals and any other materials in any form or medium customarily provided by the Contractor to the users of the Licensed Software which will provide the State with sufficient information to operate, diagnose, and maintain the Licensed Software properly, safely, and efficiently.

**Mandatory:** Required, compulsory, or obligatory.

**May:** Discretionary, permitted; used to express possibility.

**Must:** See "Mandatory".

**National Institute for Governmental Purchasing (NIGP)**: Source used for assignment of universal commodity codes to goods and services.

**Open Market Purchase:** Authorization may be given to an Agency to purchase items above direct purchase authority due to the unique nature, price, quantity, location of the using Agency, or time limitations by the DAS Materiel Division, SPB.

**Opening Date and Time:** Specified date and time for the public opening of received, labeled, and sealed formal Bids.

**Operating System:** The control program in a computer that provides the interface to the computer hardware and peripheral devices, and the usage and allocation of memory resources, processor resources, input/output resources, and security resources.

**Outsourcing:** The contracting out of a business process which an organization may have previously performed internally or has a new need for, to an independent organization from which the process is purchased back.

**Payroll & Financial Center:** Electronic procurement system of record.

**Performance Bond:** An insurance agreement, accompanied by a monetary commitment, by which a third party (the surety) accepts liability and guarantees that the Contractor fulfills any and all obligations under the contract.

**Platform:** A specific hardware and Operating System combination that is different from other hardware and Operating System combinations to the extent that a different version of the Licensed Software product is required to execute properly in the environment established by such hardware and Operating System combination.

**Point of Contact:** The person designated to receive communications and to communicate.

**Pre-Bid Conference:** A meeting scheduled for the purpose of clarifying a written solicitation and related expectations.

**Product:** Something that is distributed commercially for use or consumption and that is usually (1) tangible personal property; (2) the result of fabrication or processing; and, (3) an item that has passed through a chain of commercial distribution before ultimate use or consumption.

**Program Error:** Code in Licensed Software which produces unintended results or actions, or which produces results or actions other than those described in the specifications. A program error includes, without limitation, any Critical Program Error.

**Program Set:** The group of programs and products, including the Licensed Software specified in the solicitation, plus any additional programs and products licensed by the State under the contract for use by the State.

**Project:** The total scheme, program, or method worked out for the accomplishment of an objective, including all documentation, commodities, and goods to be provided under the contract.

**Bid:** An offer, bid, or quote submitted by a Contractor/vendor in a response to a written solicitation

**Proprietary Information:** Proprietary information is defined as trade secrets, academic and scientific research work which is in progress and unpublished, and other information which if released would give advantage to business competitors and service no public purpose (see Neb. Rev. Stat. § 84-712.05(3)). In accordance with Attorney General Opinions 92068 and 97033, proof that information is proprietary requires identification of specific named competitor(s) advantaged by release of the information and the demonstrated advantage the named competitor(s) would gain by the release of information.

**Protest/Grievance:** A complaint about a governmental action or decision related to the solicitation or resultant contract, brought by a Contractor who has timely submitted a Bid response in connection with the award in question, to DAS Materiel Division or another designated Agency with the intention of achieving a remedial result.

**Public Bid Opening:** The process of opening correctly submitted offers at the time and place specified in the written solicitation and in the presence of anyone who wished to attend.

**Quote:** See "Bid".

**Recommended Hardware Configuration:** The data processing hardware (including all terminals, auxiliary storage, communication, and other peripheral devices) to the extent utilized by the State as recommended by the Contractor.

**Release Date:** The date of public release of the written solicitation to seek offers.

**Renewal Period:** Optional contract periods subsequent to the original Contract Period for a specified duration with previously agreed to terms and conditions. Not to be confused with "Extension".

**Request for Information:** A general invitation to Contractor is requesting information for a potential future solicitation. The Request For Information is typically used as a research and information gathering tool for preparation of a solicitation.

**Responsible Contractor:** A Contractor who has the capability in all respects to perform fully and lawfully all requirements with integrity and reliability to assure good faith performance.

**Responsive Contractor:** A Contractor who has submitted a Bid which conforms to all requirements of the solicitation document.

**Shall:** See "Mandatory".

**Should:** Expected; suggested, but not necessarily mandatory.

**Software License:** Legal instrument with or without printed material that governs the use or redistribution of licensed software.

**Specifications:** The detailed statement, especially of the measurements, quality, materials, and functional characteristics, or other items to be provided under a contract.

**Statutory:** These clauses are controlled by state law and are not subject to negotiation.

**Subcontractor:** Individual or entity with whom the Contractor enters a contract to perform a portion of the work awarded to the Contractor.

**Termination:** Occurs when the contract expires or either party, pursuant to a power created by agreement or law puts an end to the contract prior to the stated expiration date. All obligations which are still executory on both sides are discharged but any right based on prior breach or performance survives.

**Third-Party:** Any person or entity, including but not limited to fiduciaries, shareholders, owners, officers, managers, employees, legally disinterested persons, and subcontractors or agents, and their employees. It shall not include any entity or person who is an interested Party to the contract or agreement.

**Trade Secret:** Information, including, but not limited to, a drawing, formula, pattern, compilation, program, device, method, technique, code, or process that (a) derives independent economic value, actual or potential, from not being known to, and not being ascertainable by proper means by, other persons who can obtain economic value from its disclosure or use; and (b) is the subject of efforts that are reasonable under the circumstances to maintain its secrecy (see Neb. Rev. Stat. § 87-502(4)).

**Trademark:** A word, phrase, logo, or other graphic symbol used by a manufacturer or Contractor to distinguish its product from those of others, registered with the U.S. Patent and Trademark Office.

**Upgrade:** Any change that improves or alters the basic function of a product of service.

**Vendor Performance Report:** A report completed by the using Agency and submitted to SPB documenting products or services delivered or performed which exceed or fail to meet the terms of the purchase order, contract, and/or solicitation specifications.

**Vendor:** Inclusive term for any Bidder or Contractor.

**Will:** See "Mandatory".

**Work Day:** See "Business Day".

# ACRONYM LIST

**ACH:** Automated Clearing House

**ARO**: After Receipt of Order

**ATA:** American Trucking Association

**BAFO:** Best and Final Offer

**BBC:** Bumper to Back of Cab

**CFM:** Cubic Feet per Minute

**CT:** Cab Trunnion

**DAS:** Department of Administrative Services

**DEF:** Diesel Exhaust Fluid

**FMCSA:** Federal Motor Carrier Safety Administration

**FOB:** Free on Board

**GL:** Gallon

**GVWR:** Gross Vehicle Weight Rating

**ITB:** Invitation to Bid

**LED:** Light Emitting Diode

**MPH:** Miles Per Hour

**NDOT:** Nebraska Department of Transportation

**NIGP**: National Institute for Governmental Purchasing

**OEM**: Original Equipment Manufacturer

**PFC**: Payroll and Financial Center

**POC**: Point of Contact

**PTO:** Power Takeoff

**RBM:** Resistance Bending Moment

**RFI:** Request for Information

**SPB:** State Purchasing Bureau

**BBC**: Bumper to Back of Cab

**RBM:** Resistance Bending Moment

## I. PROCUREMENT PROCEDURE

### A. GENERAL INFORMATION

The solicitation is designed to solicit Bids from qualified Contractors who will be responsible for providing **Truck Tractor Chassis with Tandem Rear Axle** at a competitive and reasonable cost. Terms and Conditions, Contractor Duties, Scope of Work, Bidder instructions, and Technical Specifications may be found in Sections II through VI.

Bids shall conform to all instructions, conditions, and requirements included in the solicitation. Prospective Contractors are expected to carefully examine all documents, schedules, and requirements in this solicitation, and respond to each requirement in the format prescribed. Bids may be found non-responsive if they do not conform to the solicitation.

### B. PROCURING OFFICE AND COMMUNICATION WITH STATE STAFF AND EVALUATORS

Procurement responsibilities related to this solicitation reside with SPB. The point of contact (POC) for the procurement is as follows:

| | |
|---|---|
| Solicitation Number: | 6307 OF |
| Name: | Christie Kelly |
| Agency: | State Purchasing Bureau |
| Address: | 1526 K Street, Suite 130<br>Lincoln, NE 68508 |
| Telephone: | 402-471-6500 |
| E-Mail: | as.materielpurchasing@nebraska.gov |

From the date the solicitation is issued until the Intent to Award is issued, communication from the Contractor is limited to the POC listed above. After the Intent to Award is issued, the Contractor may communicate with individuals the State has designated as responsible for negotiating the contract on behalf of the State. No member of the State Government, employee of the State, or member of the Evaluation Committee is empowered to make binding statements regarding this solicitation. The POC will issue any answers, clarifications or amendments regarding this solicitation in writing. Only the SPB or awarding Agency can award a contract. Contractors shall not have any communication with, or attempt to communicate or influence any evaluator involved in this solicitation.

The following exceptions to these restrictions are permitted:

1. Contact made pursuant to pre-existing contracts or obligations;
2. Contact required by the schedule of events or an event scheduled later by POC; and
3. Contact required for negotiation and execution of the final contract.

*The State reserves the right to reject a Contractor's Bid, withdraw an Intent to Award, or terminate a contract if the State determines there has been a violation of these procurement procedures.*

### C. SCHEDULE OF EVENTS

The State expects to adhere to the procurement schedule shown below, but all dates are approximate and subject to change.

| | ACTIVITY | DATE/TIME |
|---|---|---|
| 1. | Release solicitation | May 20, 2020 |
| 2. | Last day to submit written questions | May 27, 2020 |
| 3. | State responds to written questions through a solicitation "Addendum" and/or "Amendment" to be posted to the Internet at: http://das.nebraska.gov/materiel/purchasing.html | June 2, 2020 |
| 4. | Bid Opening<br>Location: State Purchasing Bureau<br>1526 K Street, Suite 130<br>Lincoln, NE 68508 | June 9, 2020<br>2:00 PM<br>Central Time |

## D. WRITTEN QUESTIONS AND ANSWERS

Questions regarding the meaning or interpretation of any solicitation provision must be submitted in writing to SPB and clearly marked "ITB Number 6307 OF; Truck Tractor Chassis with Tandem Rear Axle Questions". POC is not obligated to respond to questions that are received late per the Schedule of Events.

Contractors should present, as questions, any assumptions upon which the Contractor's Bid is or might be developed. Bids will be evaluated without consideration of any known or unknown assumptions of a Contractor. The contract will not incorporate any known or unknown assumptions of a Contractor.

It is preferred that questions be sent via e-mail to as.materielpurchasing@nebraska.gov, but may be delivered by hand or by U.S. Mail. It is recommended that Contractors submit questions using the following format.

| Solicitation Section Reference | Solicitation Page Number | Question |
|---|---|---|
| | | |

Written answers will be posted at http://das.nebraska.gov/materiel/purchasing.html per the Schedule of Events.

## E. SECRETARY OF STATE/TAX COMMISSIONER REGISTRATION REQUIREMENTS (Statutory)

All Contractors must be authorized to transact business in the State and comply with all Nebraska Secretary of State Registration requirements. The Contractor who is the recipient of an Intent to Award will be required to certify that it has complied and produce a true and correct copy of its current (within 90 calendar days of the Intent to Award) Certificate or Letter of Good Standing, or in the case of a sole proprietorship, provide written documentation of sole proprietorship and the United States Citizenship Attestation Form, available on the DAS website at: http://das.nebraska.gov/materiel/purchasing.html. This must be accomplished prior to execution of the contract.

## F. ETHICS IN PUBLIC CONTRACTING

The State reserves the right to reject Bids, withdraw an Intent to Award or Award, or terminate a contract if a Contractor commits or has committed ethical violations, which include, but are not limited to:

1. Offering or giving, directly or indirectly, a bribe, fee, commission, compensation, gift, gratuity, or anything of value to any person or entity in an attempt to influence the bidding process;
2. Utilize the services of lobbyists, attorneys, political activists, or consultants to influence or subvert the bidding process;
3. Being considered for, presently being, or becoming debarred, suspended, ineligible, or excluded from contracting with any state or federal entity:
4. Submitting a Bid on behalf of another party or entity;
5. Collude with any person or entity to influence the bidding process, submit sham Bids, preclude bidding, fix pricing or costs, create an unfair advantage, subvert the Bid, or prejudice the State.

The Contractor shall include this clause in any subcontract entered into for the exclusive purpose of performing this contract.

Contractor shall have an affirmative duty to report any violations of this clause by the Contractor throughout the bidding process, and throughout the term of this contract for the successful Contractor and their subcontractors.

## G. DEVIATIONS FROM THE ITB

The requirements contained in the solicitation (Sections II through VI) become a part of the terms and conditions of the contract resulting from this solicitation. Any deviations from the solicitation in Sections II through VI must be clearly defined by the Contractor in its Bid and, if accepted by the State, will become part of the contract. Any specifically defined deviations must not be in conflict with the basic nature of the solicitation, solicitation requirements, or applicable State or Federal laws or statutes. "Deviation", for the purposes of this solicitation, means any proposed changes or alterations to either the contractual language or deliverables within the scope of this solicitation. The State discourages deviations and reserves the right to reject proposed deviations.

## H. SUBMISSION OF BIDS

*****ALL BIDS MUST BE SUBMITTED IN A SEALED ENVELOPE OR CONTAINER!*****

Contractors should submit one (1) Bid marked on the first page: "ORIGINAL". If multiple Bids are submitted, the State will retain one (1) copy marked "ORIGINAL" and destroy the other copies. The Contractor is solely responsible for any variance between the copies submitted. The address label should be placed on the face of each container or Bid, must reference the ITB number and sent to the specified address in Section I B. If a recipient phone number is required for delivery purposes, 402-471-6500 should be used. The ITB number should be included in all

correspondence. The State will not furnish packaging and sealing materials. It is the Contractor's responsibility to ensure the ITB is received in a sealed envelope or container and received in the SPB by the Bid Opening date and time indicated in the Schedule of Events. No late Bids will be accepted.

The ITB document must be manually signed in an indelible manner (electronic signatures are acceptable) and returned by the Bid Opening date and time along with the Contractor's ITB along with any other requirements as stated in the ITB document in order for the Contractor's ITB to be evaluated.

It is the responsibility of the Contractor to check the website for all information relevant to this ITB to include addenda and/or amendments issued prior to the opening date. Website address is as follows: http://das.nebraska.gov/materiel/purchasing.html

Emphasis should be concentrated on conformance to the ITB instructions, responsiveness to requirements, completeness, and clarity of content. If the Contractor's Bid is presented in such a fashion that makes evaluation difficult or overly time consuming the State reserves the right to reject the Bid as non-conforming.

By signing the ITB, the Contractor guarantees compliance with the provisions stated in this ITB.

The State shall not incur any liability for any costs incurred by Contractors in replying to this ITB, in the demonstrations and/or oral presentations, or in any other activity related to bidding on this ITB.

**I. BID PREPARATION COSTS**

The State shall not incur any liability for any costs incurred by Contractors in replying to this solicitation, including any activity related to bidding on this solicitation.

**J. FAILURE TO COMPLY WITH ITB**

Violation of the terms and conditions contained in this solicitation or any resultant contract, at any time before or after the award, shall be grounds for action by the State which may include, but is not limited to, the following:

1. Rejection of a Contractor's Bid;
2. Withdrawal of the Intent to Award;
3. Withdrawal of the Award;
4. Negative Vendor Performance Report(s)
5. Termination of the resulting contract;
6. Legal action; or,
7. Suspension of the Contractor from further bidding with the State for the period of time relative to the seriousness of the violation, such period to be within the sole discretion of the State.

**K. BID CORRECTIONS**

A Contractor may correct a mistake in a Bid prior to the time of opening by giving written notice to the State of intent to withdraw the Bid for modification or to withdraw the Bid completely. Changing a Bid after opening may be permitted if the change is made to correct a minor error that does not affect price, quantity, quality, delivery, or contractual conditions. In case of a mathematical error in extension of price, unit price shall govern.

**L. LATE BIDS**

Bids received after the time and date of the Bid opening will be considered late Bids. Late Bids will be returned unopened, if requested by the Contractor and at Contractor's expense. The State is not responsible for Bids that are late or lost regardless of cause or fault.

**M. BID OPENING**

Anyone may attend the opening. It is considered a public opening. The Buyer will read the names of the respondents. Depending upon the complexity of the Bid for goods, the buyer may read the Bids aloud or allow Bids be available for viewing by the public during the Bid opening. Once the Bid opening has concluded, the Bids will not be available for viewing until the Intent to Award has been posted. An initial Bid tabulation will be posted to the website as soon as feasible. Information identified as proprietary by the submitting Contractor, in accordance with the solicitation and state statute, will not be posted. If the state determines submitted information should not be withheld, in accordance with the Public Records Act, or if ordered to release any withheld information, said information may then be released. The submitting Contractor will be notified of the release and it shall be the obligation of the submitting Contractor to take further action, if it believes the information should not be released.

## N. ITB/BID REQUIREMENTS

The Bids will first be examined to determine if all requirements listed below have been addressed and whether further evaluation is warranted. Bids not meeting the requirements may be rejected as non-responsive. The requirements are:

1. Original Commodity ITB form signed using an indelible method (electronic signatures are acceptable);
2. Clarity and responsiveness of the Bid;
3. Completed Sections II through VI;
4. Completed ITB Form or State's Bid Sheet.

## O. EVALUATION OF BIDS

All Bids that are responsive to the solicitation will be evaluated based on the following:

**Neb. Rev. Stat. § 81-161 allows the quality of performance of previous contracts to be considered when evaluating responses to competitively bid solicitations in determining the lowest responsible bidder.** Information obtained from any Contractor Performance Report (See Terms & Conditions, Section H) may be used in evaluating responses to solicitations for goods and services to determine the best value for the State.

**Neb. Rev. Stat. § 73-107 allows for a preference for a resident disabled veteran or business located in a designated enterprise zone.** When a state contract is to be awarded to the lowest responsible Contractor, a resident disabled veteran or a business located in a designated enterprise zone under the Enterprise Zone Act shall be allowed a preference over any other resident or nonresident Contractor, if all other factors are equal.

**Resident disabled veterans means any person (a) who resides in the State of Nebraska, who served in the United States Armed Forces, including any reserve component or the National Guard, who was discharged or otherwise separated with a characterization of honorable or general (under honorable conditions), and who possesses a disability rating letter issued by the United States Department of Veterans Affairs establishing a service-connected disability or a disability determination from the United States Department of Defense and (b)(i) who owns and controls a business or, in the case of a publicly owned business, more than fifty percent of the stock is owned by one or more persons described in subdivision (a) of this subsection and (ii) the management and daily business operations of the business are controlled by one or more persons described in subdivision(a) of this subsection. Any contract entered into without compliance with this section shall be null and void.**

Therefore, if a resident disabled veteran or business located in a designated enterprise zone submits a Bid in accordance with Neb. Rev. Stat. § 73-107 and has so indicated on the ITB cover page requesting priority/preference to be considered in the award of this contract, the following will need to be submitted by the Contractor within ten (10) business days of request:

1. Documentation from the United States Armed Forces confirming service;
2. Documentation of discharge or otherwise separated characterization of honorable or general (under honorable conditions);
3. Disability rating letter issued by the United States Department of Veterans Affairs establishing a service-connected disability or a disability determination from the United States Department of Defense; and
4. Documentation which shows ownership and control of a business or, in the case of a publicly owned business, more than fifty percent of the stock is owned by one or more persons described in subdivision (a) of this subsection; and the management and daily business operations of the business are controlled by one or more persons described in subdivision (a) of this subsection.

Failure to submit the requested documentation within ten (10) business days of notice will disqualify the Contractor from consideration of the preference.

## P. BEST AND FINAL OFFER

If BAFO's are requested by the State and submitted by the Contractor, they will be evaluated (using the stated BAFO criteria) and ranked by the Evaluation Committee. The State reserves the right to conduct more than one BAFO. The award will then be granted to the lowest responsible Contractor. However, a Contractor should provide its best offer in its original Bid. Contractors should not expect that the State will request a BAFO.

**Q. REFERENCE AND CREDIT CHECKS**

The State reserves the right to conduct and consider reference and credit checks. The State reserves the right to use third parties to conduct reference and credit checks. By submitting a Bid in response to this solicitation, the Contractor grants to the State the right to contact or arrange a visit in person with any or all of the Contractor's clients. Reference and credit checks may be grounds to reject a Bid, withdraw an Intent to Award, or rescind the award of a contract.

**R. AWARD**

The State reserves the right to evaluate Bids and award contracts in a manner utilizing criteria selected at the State's discretion and in the State's best interest. After evaluation of the Bids, or at any point in the solicitation process, the State may take one or more of the following actions:

1. Amend the solicitation;
2. Extend the time of or establish a new Bid Opening time;
3. Waive deviations or errors in the State's solicitation process and in Contractor Bids that are not material, do not compromise the solicitation process or a Contractor's Bid, and do not improve a Contractor's competitive position;
4. Accept or reject a portion of or all of a Bid;
5. Accept or reject all Bids;
6. Withdraw the solicitation;
7. Elect to rebid the solicitation;
8. Award single lines or multiple lines to one or more Contractors; or,
9. Award one (1) or more all-inclusive contracts.

The State may consider, but is not limited to considering, one or more of the following award criteria:

1. Price;
2. Location;
3. Quality;
4. Delivery time;
5. Contractor qualifications and capabilities; and,
6. State contract management requirements and/or costs.

The solicitation does not commit the State to award a contract. Once an Intent to Award decision has been determined, it will be posted to the Internet at:
http://das.nebraska.gov/materiel/purchasing.html

Any protests must be filed by a Contractor within ten (10) business days after the Intent to Award decision is posted to the Internet. Grievance and protest procedure is available on the Internet at:
http://das.nebraska.gov/materiel/purchasing.html

**S. SPECIFICATIONS**

Any manufacturer's names, trade names, brand names, information and/or catalog numbers listed in a specification are for reference and not intended to limit competition, but will be used as the standard by which equivalent material offered will be judged. The Materiel Administrator or designee will be the sole judge of equivalency. The Contractor may offer any brands which meets or exceeds the specification. When a specific product is required, the solicitation will so state. Any item Bid is to be the latest current model under standard production at the time of order. No used or refurbished equipment will be accepted, unless otherwise stated.

**T. ALTERNATE/EQUIVALENT BIDS**

Contractor may offer Bids which are at variance from the express specifications of the solicitation. The State reserves the right to consider and accept such Bids if, in the judgment of the Materiel Administrator, the Bid will result in goods and/or services equivalent to or better than those which would be supplied in the original Bid specifications. Contractor must indicate on the solicitation the manufacturer's name, number and shall submit with their Bid, sketches, descriptive literature and/or complete specifications. Reference to literature submitted with a previous Bid will not satisfy this provision. Bids which do not comply with these requirements are subject to rejection. In the absence of any stated deviation or exception, the Bid will be accepted as in strict compliance with all terms, conditions and specification, and the Contractor shall be held liable therefore.

**U. LUMP SUM OR "ALL OR NONE" BIDS**

The State reserves the right to purchase item-by-item, by groups or as a total when the State may benefit by so doing. Contractors may submit a Bid on an "all or none" or "lump sum" basis, but should also submit a Bid on an item-by-item basis. The term "all or none" means a conditional Bid which requires the purchase of all items on which Bids are offered and Contractor declines to accept award on individual items; a "lump sum" Bid is one in which the Contractor offers a lower price than the sum of the individual Bids if all items are purchased, but agrees to deliver individual items at the prices quoted.

**V. EMAIL SUBMISSIONS**

SPB will not accept Bids by email, electronic, voice, or telephone Bids **except** for One-Time Purchases under $50,000.00.

**W. BID TABULATIONS**

Bid tabulations are available on the website at: http://www.das.state.ne.us/materiel/purchasing/bidtabs.htm.

**X. REJECTION OF BIDS**

The State reserves the right to reject any or all Bids, wholly or in part, in the best interest of the State.

**Y. RESIDENT BIDDER**

Pursuant to Neb. Rev. Stat. §§ 73-101.01 through 73-101.02, a Resident Bidder shall be allowed a preference against a Non-resident Bidder from a state which gives or requires a preference to Bidders from that state. The preference shall be equal to the preference given or required by the state of the Nonresident Bidders. Where the lowest responsible bid from a resident Bidder is equal in all respects to one from a nonresident Bidder from a state which has no preference law, the resident Bidder shall be awarded the contract. The provision of this preference shall not apply to any contract for any project upon which federal funds would be withheld because of the provisions of this preference.

## II. TERMS AND CONDITIONS

**Contractors should complete Section II through VI as part of their Bid**. Contractor is expected to read the Terms and Conditions and must initial either accept, reject, or reject and provide alternative language for each clause. The Contractor should also provide an explanation of why the Contractor rejected the clause or rejected the clause and provided alternate language using "Track Changes". Upon request an electronic copy of the Bid with "Track Changes" must be submitted in an editable Word format. By signing the solicitation, Contractor is agreeing to be legally bound by all the accepted terms and conditions, and any proposed alternative Terms and Conditions submitted with the Bid. The State reserves the right to negotiate rejected or proposed alternative language. If the State and Contractor fail to agree on the final Terms and Conditions, the State reserves the right to reject the Bid. The State is soliciting Bids in response to the solicitation. The State reserves the right to reject Bids that attempt to substitute the Contractor's commercial contracts and/or documents for this solicitation.

The Contractor should submit with their Bid any license, user agreement, service level agreement, or similar documents that the Contractor wants incorporated in the Contract. Upon notice of Intent to Award, the Contractor must submit a copy of these documents in an editable Word format. The State will not consider incorporation of any document not submitted with the Contractor's Bid. These documents shall be subject to negotiation and will be incorporated as addendums if agreed to by the Parties.

If a conflict or ambiguity arises after the addendums have been negotiated and agreed to, the addendums shall be interpreted as follows:

1. If only one (1) Party's document has a particular clause then that clause shall control;
2. If both Party's documents have a similar clause, but the clauses do not conflict, the clauses shall be read together;
3. If both Party's documents have a similar clause, but the clauses conflict, the State's clause shall control.

### A. GENERAL

| Accept (Initial) | Reject (Initial) | Reject & Provide Alternative (Initial) | NOTES/COMMENTS: |
|---|---|---|---|
| TPN | | | |

The contract resulting from this solicitation shall incorporate the following documents:

1. ITB and Addenda;
2. Amendments to the solicitation;
3. Questions and Answers;
4. Contractor's Bid;
5. The executed Contract and any Addenda, if applicable, and properly submitted documents; and,
6. Amendments to the Contract

These documents constitute the entirety of the contract.

Unless otherwise specifically stated in a future contract amendment, in case of any conflict between the incorporated documents, the documents shall govern in the following order of preference with number one (1) receiving preference over all other documents and with each lower numbered document having preference over any higher numbered document: 1) Amendment to the executed Contract with the most recent dated amendment having the highest priority, 2) executed Contract and any attached Addenda, 3) Amendments to solicitation and any Questions and Answers, 4) the original solicitation document and any Addenda, and 5) the Contractor's submitted Bid. Any ambiguity or conflict in the contract discovered after its execution, not otherwise addressed herein, shall be resolved in accordance with the rules of contract interpretation as established in the State.

### B. NOTIFICATION

| Accept (Initial) | Reject (Initial) | Reject & Provide Alternative (Initial) | NOTES/COMMENTS: |
|---|---|---|---|
| TPN | | | |

Contractor and State shall identify the Contract Manager who shall serve as the Point of Contact for the executed contract. Communications regarding the executed contract shall be in writing and shall be deemed to have been given if delivered personally or mailed, by U.S. Mail, postage prepaid, return receipt requested, to the parties at their respective addresses set forth below, or at such other addresses as may be specified in writing by either of the parties. All notices, requests, or communications shall be deemed effective upon personal delivery or five (5) calendar days following deposit in the mail. Either party may change its address for notification purposes by giving notice of the change, and setting forth the new address and an effective date.

**C. NOTICE (BUYER'S REPRESENTATIVE)**
The State reserves the right to appoint a Buyer's Representative to manage [or assist the SPB Buyer in managing] the contract on behalf of the State. The Buyer's Representative will be appointed in writing, and the appointment document will specify the extent of the Buyer's Representative authority and responsibilities. If a Buyer's Representative is appointed, the Contractor will be provided a copy of the appointment document, and is expected to cooperate accordingly with the Buyer's Representative. The Buyer's Representative has no authority to bind the State to a contract, amendment, addendum, or other change or addition to the contract.

**D. GOVERNING LAW (Statutory)**
Notwithstanding any other provision of this contract, or any amendment or addendum(s) entered into contemporaneously or at a later time, the parties understand and agree that, (1) the State is a sovereign state and its authority to contract is therefore subject to limitation by the State's Constitution, statutes, common law, and regulation; (2) this contract will be interpreted and enforced under the laws of the State; (3) any action to enforce the provisions of this contract must be brought in the State per state law; (4) the person signing this contract on behalf of the State does not have the authority to waive the State's sovereign immunity, statutes, common law, or regulations; (5) the indemnity, limitation of liability, remedy, and other similar provisions of the final contract, if any, are entered into subject to the State's Constitution, statutes, common law, regulations, and sovereign immunity; and, (6) all terms and conditions of the final contract, including but not limited to the clauses concerning third-party use, licenses, warranties, limitations of liability, governing law and venue, usage verification, indemnity, liability, remedy or other similar provisions of the final contract are entered into specifically subject to the State's Constitution, statutes, common law, regulations, and sovereign immunity.

The Parties must comply with all applicable local, state and federal laws, ordinances, rules, orders, and regulations.

**E. AMENDMENT**
This Contract may be amended in writing, within scope, upon the agreement of both parties.

**F. CHANGE ORDERS OR SUBSTITUTIONS**

| Accept (Initial) | Reject (Initial) | Reject & Provide Alternative (Initial) | NOTES/COMMENTS: |
|---|---|---|---|
| | | | |

The State and the Contractor, upon the written agreement, may make changes to the contract within the general scope of the solicitation. Changes may involve specifications, the quantity of work, or such other items as the State may find necessary or desirable. Corrections of any deliverable, service, or work required pursuant to the contract shall not be deemed a change. The Contractor may not claim forfeiture of the contract by reasons of such changes.

The Contractor shall prepare a written description of the work required due to the change and an itemized cost sheet for the change. Changes in work and the amount of compensation to be paid to the Contractor shall be determined in accordance with applicable unit prices if any, a pro-rated value, or through negotiations. The State shall not incur a price increase for changes that should have been included in the Contractor's Bid, were foreseeable, or result from difficulties with or failure of the Contractor's Bid or performance.

No change shall be implemented by the Contractor until approved by the State, and the Contract is amended to reflect the change and associated costs, if any. If there is a dispute regarding the cost, but both parties agree that immediate implementation is necessary, the change may be implemented, and cost negotiations may continue with both Parties retaining all remedies under the contract and law. In the event any product is discontinued or replaced upon mutual consent during the contract period or prior to delivery, the State reserves the right to amend the contract or purchase order to include the alternate product at the same price.

*****Contractor will not substitute any item that has been awarded without prior written approval of SPB*****

**G. VENDOR PERFORMANCE REPORT(S)**

| Accept (Initial) | Reject (Initial) | Reject & Provide Alternative (Initial) | NOTES/COMMENTS: |
|---|---|---|---|
| | | | |

The State may document any instance(s) of products or services delivered or performed which exceed or fail to meet the terms of the purchase order, contract, and/or solicitation specifications. The SPB may contact the Vendor regarding any such report. Vendor performance report(s) will become a part of the permanent record of the Vendor.

## H. NOTICE OF POTENTIAL CONTRACTOR BREACH

| Accept (Initial) | Reject (Initial) | Reject & Provide Alternative (Initial) | NOTES/COMMENTS: |
|---|---|---|---|
| JPN | | | |

If Contractor breaches the contract or anticipates breaching the contract, the Contractor shall immediately give written notice to the State. The notice shall explain the breach or potential breach, a proposed cure, and may include a request for a waiver of the breach if so desired. The State may, in its discretion, temporarily or permanently waive the breach. By granting a waiver, the State does not forfeit any rights or remedies to which the State is entitled by law or equity, or pursuant to the provisions of the contract. Failure to give immediate notice, however, may be grounds for denial of any request for a waiver of a breach.

## I. BREACH

| Accept (Initial) | Reject (Initial) | Reject & Provide Alternative (Initial) | NOTES/COMMENTS: |
|---|---|---|---|
| JPN | | | |

Either Party may terminate the contract, in whole or in part, if the other Party breaches its duty to perform its obligations under the contract in a timely and proper manner. Termination requires written notice of default and a 30 calendar day (or longer at the non-breaching Party's discretion considering the gravity and nature of the default) cure period. Said notice shall be delivered by Certified Mail, Return Receipt Requested, or in person with proof of delivery. Allowing time to cure a failure or breach of contract does not waive the right to immediately terminate the contract for the same or different contract breach which may occur at a different time.

In case of breach by the Contractor, the State may, without unreasonable delay, make a good faith effort to make a reasonable purchase or contract to purchased goods in substitution of those due from the Contractor. The State may recover from the Contractor as damages the difference between the costs of covering the breach. Notwithstanding any clause to the contrary, the State may also recover the contract price together with any incidental or consequential damages defined in UCC Section 2-715, but less expenses saved in consequence of Contractor's breach OR In case of default of the Contractor, the State may contract the service from other sources and hold the Contractor responsible for any excess cost occasioned thereby.

The State's failure to make payment shall not be a breach, and the Contractor shall retain all available statutory remedies.

## J. NON-WAIVER OF BREACH

| Accept (Initial) | Reject (Initial) | Reject & Provide Alternative (Initial) | NOTES/COMMENTS: |
|---|---|---|---|
| JPN | | | |

The acceptance of late performance with or without objection or reservation by a Party shall not waive any rights of the Party nor constitute a waiver of the requirement of timely performance of any obligations remaining to be performed.

## K. SEVERABILITY

| Accept (Initial) | Reject (Initial) | Reject & Provide Alternative (Initial) | NOTES/COMMENTS: |
|---|---|---|---|
| JPN | | | |

If any term or condition of the contract is declared by a court of competent jurisdiction to be illegal or in conflict with any law, the validity of the remaining terms and conditions shall not be affected, and the rights and obligations of the parties shall be construed and enforced as if the contract did not contain the provision held to be invalid or illegal.

## L. INDEMNIFICATION

| Accept (Initial) | Reject (Initial) | Reject & Provide Alternative (Initial) | NOTES/COMMENTS: |
|---|---|---|---|
| TPM | | | |

1. **GENERAL**
   The Contractor agrees to defend, indemnify, and hold harmless the State and its employees, volunteers, agents, and its elected and appointed officials ("the indemnified parties") from and against any and all claims, liens, demands, damages, liability, actions, causes of action, losses, judgments, costs, and expenses of every nature, including investigation costs and expenses, settlement costs, and attorney fees and expenses ("the claims"), sustained or asserted against the State for personal injury, death, or property loss or damage, arising out of, resulting from, or attributable to the willful misconduct, negligence, error, or omission of the Contractor, its employees, Subcontractors, consultants, representatives, and agents, resulting from this contract, except to the extent such Contractor liability is attenuated by any action of the State which directly and proximately contributed to the claims.

2. **SELF-INSURANCE (Statutory)**
   The State is self-insured for any loss and purchases excess insurance coverage pursuant to Neb. Rev. Stat. § 81-8,239.01 (Reissue 2008). If there is a presumed loss under the provisions of this contract, Contractor may file a claim with the Office of Risk Management pursuant to Neb. Rev. Stat. §§ 81-8,829 through 81-8,306 for review by the State Claims Board. The State retains all rights and immunities under the State Miscellaneous (Section 81-8,294), Tort (Section 81-8,209), and Contract Claim Acts (Section 81-8,302), as outlined in Neb. Rev. Stat. § 81-8,209 et seq. and under any other provisions of law and accepts liability under this contract to the extent provided by law.

## M. ATTORNEY'S FEES

| Accept (Initial) | Reject (Initial) | Reject & Provide Alternative (Initial) | NOTES/COMMENTS: |
|---|---|---|---|
| TPM | | | |

In the event of any litigation, appeal, or other legal action to enforce any provision of the contract, the Parties agree to pay all expenses of such action, as permitted by law and if ordered by the court, including attorney's fees and costs, if the other party prevails.

## N. ASSIGNMENT, SALE, OR MERGER

| Accept (Initial) | Reject (Initial) | Reject & Provide Alternative (Initial) | NOTES/COMMENTS: |
|---|---|---|---|
| TPM | | | |

Either party may assign the contract upon mutual written agreement of the other party. Such agreement shall not be unreasonably withheld.

The Contractor retains the right to enter into a sale, merger, acquisition, internal reorganization, or similar transaction involving Contractor's business. Contractor agrees to cooperate with the State in executing amendments to the contract to allow for the transaction. If a third party or entity is involved in the transaction, the Contractor will remain responsible for performance of the contract until such time as the person or entity involved in the transaction agrees in writing to be contractually bound by this contract and perform all obligations of the contract.

## O. CONTRACTING WITH OTHER POLITICAL SUB-DIVISIONS OF THE STATE OR ANOTHER STATE

| Accept (Initial) | Reject (Initial) | Reject & Provide Alternative (Initial) | NOTES/COMMENTS: |
|---|---|---|---|
| TPM | | | |

The Contractor may, but shall not be required to, allow Agencies, as defined in Neb. Rev. Stat. § 81-145, to use this contract. The Terms and Conditions, including price, of the contract may not be amended. The State shall not be contractually obligated or liable for any contract entered into pursuant to this clause.

The Contractor may, but shall not be required to, allow other states, Agencies or divisions of other states, or political subdivisions of other states to use this contract. The Terms and Conditions, including price, of this contract shall apply to any such contract, but may be amended upon mutual consent of the Parties. The State shall not be contractually or otherwise obligated or liable under any contract entered into pursuant to this clause. The State shall be notified if a contract is executed based upon this contract.

**P. FORCE MAJEURE**

| Accept (Initial) | Reject (Initial) | Reject & Provide Alternative (Initial) | NOTES/COMMENTS: |
|---|---|---|---|
| JPN | | | |

Neither party shall be liable for any costs or damages, or for default resulting from its inability to perform any of its obligations under the contract due to a natural or man-made event outside the control and not the fault of the affected party ("Force Majeure Event"). The Party so affected shall immediately make a written request for relief to the other party, and shall have the burden of proof to justify the request. The other Party may granted the relief requested; relief may not be unreasonably withheld. Labor disputes with the impacted party's own employees will not be considered a Force Majeure Event.

**Q. CONFIDENTIALITY**

| Accept (Initial) | Reject (Initial) | Reject & Provide Alternative (Initial) | NOTES/COMMENTS: |
|---|---|---|---|
| JPN | | | |

All materials and information provided by the Parties or acquired by a Party on behalf of the other Party shall be regarded as confidential information. All materials and information provided or acquired shall be handled in accordance with federal and state law, and ethical standards. Should said confidentiality be breached by a Party, the Party shall notify the other Party immediately of said breach and take immediate corrective action.

It is incumbent upon the Parties to inform their officers and employees of the penalties for improper disclosure imposed by the Privacy Act of 1974, 5 U.S.C. 552a. Specifically, 5 U.S.C. 552a (i)(1), which is made applicable by 5 U.S.C. 552a (m)(1), provides that any officer or employee, who by virtue of his/her employment or official position has possession of or access to Agency records which contain individually identifiable information, the disclosure of which is prohibited by the Privacy Act or regulations established thereunder, and who knowing that disclosure of the specific material is prohibited, willfully discloses the material in any manner to any person or Agency not entitled to receive it, shall be guilty of a misdemeanor and fined not more than $5,000.00.

**R. EARLY TERMINATION**

| Accept (Initial) | Reject (Initial) | Reject & Provide Alternative (Initial) | NOTES/COMMENTS: |
|---|---|---|---|
| JPN | | | |

The contract may be terminated as follows:

1. The State and the Contractor, by mutual written agreement, may terminate the contract at any time.

2. The State, at its sole discretion, may terminate the contract for any reason upon 30 calendar days' written notice to the Contractor. Such termination shall not relieve the Contractor of warranty or other service obligations incurred under the terms of the contract. In the event of termination the Contractor shall be entitled to payment, determined on a pro rata basis, for products or services satisfactorily performed or provided.

3. The State may terminate the contract immediately for the following reasons:

   a. if directed to do so by statute;
   b. Contractor has made an assignment for the benefit of creditors, has admitted in writing its inability to pay debts as they mature, or has ceased operating in the normal course of business;
   c. a trustee or receiver of the Contractor or of any substantial part of the Contractor's assets has been appointed by a court;

d. fraud, misappropriation, embezzlement, malfeasance, misfeasance, or illegal conduct pertaining to performance under the contract by its Contractor, its employees, officers, directors, or shareholders;
e. an involuntary proceeding has been commenced by any party against the Contractor under any one of the chapters of Title 11 of the United States Code and (i) the proceeding has been pending for at least sixty (60) calendar days; or (ii) the Contractor has consented, either expressly or by operation of law, to the entry of an order for relief; or (iii) the Contractor has been decreed or adjudged a debtor;
f. a voluntary petition has been filed by the Contractor under any of the chapters of Title 11 of the United States Code;
g. Contractor intentionally discloses confidential information;
h. Contractor has or announces it will discontinue support of the deliverable; and,
i. In the event funding is no longer available.

**S. CONTRACT CLOSEOUT**

| Accept (Initial) | Reject (Initial) | Reject & Provide Alternative (Initial) | NOTES/COMMENTS: |
|---|---|---|---|
| JPN | | | |

Upon termination of the contract for any reason the Contractor shall within 30 days, unless stated otherwise herein:

1. Transfer all completed or partially completed deliverables to the State;
2. Transfer ownership and title to all completed or partially completed deliverables to the State;
3. Return to the State all information and data, unless the Contractor is permitted to keep the information or data by contract or rule of law. Contractor may retain one copy of any information or data as required to comply with applicable work product documentation standards or as are automatically retained in the course of Contractor's routine back up procedures;
4. Cooperate with any successor Contactor, person or entity in the assumption of any or all of the obligations of this contract;
5. Cooperate with any successor Contactor, person or entity with the transfer of information or data related to this contract;
6. Return or vacate any state owned real or personal property; and,
7. Return all data in a mutually acceptable format and manner.

Nothing in this Section should be construed to require the Contractor to surrender intellectual property, real or person property, or information or data owned by the Contractor for which the State has no legal claim.

## III. CONTRACTOR DUTIES

### A. INDEPENDENT CONTRACTOR / OBLIGATIONS

| Accept (Initial) | Reject (Initial) | Reject & Provide Alternative (Initial) | NOTES/COMMENTS: |
|---|---|---|---|
| | | | |

It is agreed that the Contractor is an independent Contractor and that nothing contained herein is intended or should be construed as creating or establishing a relationship of employment, Agency, or a partnership.

The Contractor is solely responsible for fulfilling the contract. The Contractor or the Contractor's representative shall be the sole point of contact regarding all contractual matters.

The Contractor shall secure, at its own expense, all personnel required to perform the services under the contract. The personnel the Contractor uses to fulfill the contract shall have no contractual or other legal relationship with the State; they shall not be considered employees of the State and shall not be entitled to any compensation, rights or benefits from the State, including but not limited to, tenure rights, medical and hospital care, sick and vacation leave, severance pay, or retirement benefits.

By-name personnel commitments made in the Contractor's Bid shall not be changed without the prior written approval of the State. Replacement of these personnel, if approved by the State, shall be with personnel of equal or greater ability and qualifications.

The Contractor warrants that all persons assigned to the project shall be employees of the Contractor or a Subcontractor, and shall be fully qualified to perform the work required herein. Personnel employed by the Contractor or a Subcontractor to fulfill the terms of the contract shall remain under the sole direction and control of the Contractor or the Subcontractor respectively.

With respect to its employees, the Contractor agrees to be solely responsible for the following:

1. Any and all pay, benefits, and employment taxes and/or other payroll withholding;
2. Any and all vehicles used by the Contractor's employees, including all insurance required by state law;
3. Damages incurred by Contractor's employees within the scope of their duties under the contract;
4. Maintaining Workers' Compensation and health insurance that complies with state and federal law and submitting any reports on such insurance to the extent required by governing law;
5. Determining the hours to be worked and the duties to be performed by the Contractor's employees; and,
6. All claims on behalf of any person arising out of employment or alleged employment (including without limit claims of discrimination alleged against the Contractor, its officers, agents, or Subcontractors or Subcontractor's employees).

If the Contractor intends to utilize any Subcontractor, the Subcontractor's level of effort, tasks, and time allocation must be clearly defined in the Contractor's Bid. The Contractor shall agree that it will not utilize any Subcontractors not specifically included in its Bid in the performance of the contract without the prior written authorization of the State.

The State reserves the right to require the Contractor to reassign or remove from the project any Contractor or Subcontractor employee.

Contractor shall insure that the terms and conditions contained in any contract with a Subcontractor does not conflict with the terms and conditions of this contract.

The Contractor shall include a similar provision, for the protection of the State, in the contract with any Subcontractor engaged to perform work on this contract.

### B. EMPLOYEE WORK ELIGIBILITY STATUS

The Contractor is required and hereby agrees to use a federal immigration verification system to determine the work eligibility status of employees physically performing work within the State. A federal immigration verification system means the electronic verification of the work authorization program authorized by the Illegal Immigration Reform and Immigrant Responsibility Act of 1996, 8 U.S.C. 1324a, known as the E-Verify Program, or an equivalent Federal program designated by the United States Department of Homeland Security or other Federal Agency authorized to verify the work eligibility status of an employee.

If the Contractor is an individual or sole proprietorship, the following applies:

1. The Contractor must complete the United States Citizenship Attestation Form, available on the DAS website at http://das.nebraska.gov/materiel/purchasing.html

The completed United States Attestation Form should be submitted with the solicitation response.

2. If the Contractor indicates on such attestation form that he or she is a qualified alien, the Contractor agrees to provide the U.S. Citizenship and Immigration Services documentation required to verify the Contractor's lawful presence in the United States using the Systematic Alien Verification for Entitlements (SAVE) Program.

3. The Contractor understands and agrees that lawful presence in the United States is required and the Contractor may be disqualified or the contract terminated if such lawful presence cannot be verified as required by Neb. Rev. Stat. § 4-108.

**C. COMPLIANCE WITH CIVIL RIGHTS LAWS AND EQUAL OPPORTUNITY EMPLOYMENT / NONDISCRIMINATION (Statutory)**

The Contractor shall comply with all applicable local, state, and federal statutes and regulations regarding civil rights laws and equal opportunity employment. The Nebraska Fair Employment Practice Act prohibits Contractors of the State, and their Subcontractors, from discriminating against any employee or applicant for employment, with respect to hire, tenure, terms, conditions, compensation, or privileges of employment because of race, color, religion, sex, disability, marital status, or national origin (Neb. Rev. Stat. §§ 48-1101 through 48-1125). The Contractor guarantees compliance with the Nebraska Fair Employment Practice Act, and breach of this provision shall be regarded as a material breach of contract. The Contractor shall insert a similar provision in all Subcontracts for goods or services to be covered by any contract resulting from this solicitation.

**D. COOPERATION WITH OTHER CONTRACTORS**

| Accept (Initial) | Reject (Initial) | Reject & Provide Alternative (Initial) | NOTES/COMMENTS: |
|---|---|---|---|
| | | | |

Contractor may be required to work with or in close proximity to other Contractors or individuals that may be working on the same or different projects. The Contractor shall agree to cooperate with such other Contractors or individuals, and shall not commit or permit any act which may interfere with the performance of work by any other Contractor or individual. Contractor is not required to compromise Contractor's intellectual property or proprietary information unless expressly required to do so by this contract.

**E. DISCOUNTS**

Prices quoted shall be inclusive of ALL trade discounts. Cash discount terms of less than 30 days will not be considered as part of the Bid. Cash discount periods will be computed from the date of receipt of a properly executed claim voucher or the date of completion of delivery of all items in a satisfactory condition, whichever is later.

**F. PRICES**

Prices quoted shall be net, including transportation and delivery charges fully prepaid by the Contractor (FOB Destination is named in the solicitation). No additional charges will be allowed for packing, packages, or partial delivery costs.

When an arithmetic error has been made in the extended total, the unit price will govern.

All prices, costs, and Terms and Conditions submitted in the Bid, once accepted by the State, shall remain fixed and valid commencing on the opening date of the Bid, until an award is made through the first 180 days of the contract, or the solicitation is cancelled.

Any request for a price increase, after the initial term of 180 days, must be submitted in writing to SPB a minimum of 30 days. Documentation will be required by the State to support the price increase.

**The State reserves the right to deny any requested price increase. No price increases are to be billed to any State Agencies prior to written amendment of the contract by the parties.**

**The State will be given full proportionate benefit of any decreases for the term of the contract.**

**G. COST CLARIFICATION**

The State reserves the right to review all aspects of cost for reasonableness and to request clarification of any Bid where the cost component shows significant and unsupported deviation from industry standards or in areas where detailed pricing is required.

## H. PERMITS, REGULATIONS, LAWS

| Accept (Initial) | Reject (Initial) | Reject & Provide Alternative (Initial) | NOTES/COMMENTS: |
|---|---|---|---|
| JPN | | | |

The contract price shall include the cost of all royalties, licenses, permits, and approvals, whether arising from patents, trademarks, copyrights or otherwise, that are in any way involved in the contract. The Contractor shall obtain and pay for all royalties, licenses, and permits, and approvals necessary for the performance of the contract. The Contractor must guarantee that it has the full legal right to the materials, supplies, equipment, software, and other items used to execute this contract.

## I. NOTICE OF POTENTIAL CONTRACTOR BREACH

| Accept (Initial) | Reject (Initial) | Reject & Provide Alternative (Initial) | NOTES/COMMENTS: |
|---|---|---|---|
| JPN | | | |

If Contractor breaches the contract or anticipates breaching the contract the Contractor shall immediately give written notice to the State. The notice shall explain the breach or potential breach, and may include a request for a waiver of the breach if so desired. The State may, at its discretion, temporarily or permanently waive the breach. By granting a temporary waiver, the State does not forfeit any rights or remedies to which the State is entitled by law or equity, or pursuant to the provisions of the contract. Failure to give immediate notice, however, may be grounds for denial of any request for a waiver of a breach.

## J. ANTITRUST

| Accept (Initial) | Reject (Initial) | Reject & Provide Alternative (Initial) | NOTES/COMMENTS: |
|---|---|---|---|
| JPN | | | |

The Contractor hereby assigns to the State any and all claims for overcharges as to goods and/or services provided in connection with this contract resulting from antitrust violations which arise under antitrust laws of the United States and the antitrust laws of the State.

## K. CONFLICT OF INTEREST

| Accept (Initial) | Reject (Initial) | Reject & Provide Alternative (Initial) | NOTES/COMMENTS: |
|---|---|---|---|
| JPN | | | |

By submitting a Bid, bidder certifies that no relationship exists between the bidder and any person or entity which either is, or gives the appearance of, a conflict of interest related to this Request for Bid or project.

Bidder further certifies that bidder will not employ any individual known by bidder to have a conflict of interest nor shall bidder take any action or acquire any interest, either directly or indirectly, which will conflict in any manner or degree with the performance of its contractual obligations hereunder or which creates an actual or appearance of conflict of interest.

If there is an actual or perceived conflict of interest, bidder shall provide with its Bid a full disclosure of the facts describing such actual or perceived conflict of interest and a proposed mitigation plan for consideration. The State will then consider such disclosure and proposed mitigation plan and either approve or reject as part of the overall bid evaluation.

## L. ADVERTISING

| Accept (Initial) | Reject (Initial) | Reject & Provide Alternative (Initial) | NOTES/COMMENTS: |
|---|---|---|---|
| TPM | | | |

The Contractor agrees not to refer to the contract award in advertising in such a manner as to state or imply that the company or its goods and services are endorsed or preferred by the State. Any publicity releases pertaining to the project shall not be issued without prior written approval from the State.

## M. DISASTER RECOVERY/BACK UP PLAN

| Accept (Initial) | Reject (Initial) | Reject & Provide Alternative (Initial) | NOTES/COMMENTS: |
|---|---|---|---|
| TPM | | | |

The Contractor shall have a disaster recovery and back-up plan, of which a copy should be provided upon request to the State, which includes, but is not limited to equipment, personnel, facilities, and transportation, in order to continue delivery of goods and services as specified under the specifications in the contract in the event of a disaster.

## N. DRUG POLICY

| Accept (Initial) | Reject (Initial) | Reject & Provide Alternative (Initial) | NOTES/COMMENTS: |
|---|---|---|---|
| TPM | | | |

The Contractor certifies it maintains a drug free work place environment to ensure worker safety and workplace integrity. Contractor agrees to provide a copy of its drug free workplace policy at any time upon request by the State.

## O. WARRANTY

| Accept (Initial) | Reject (Initial) | Reject & Provide Alternative (Initial) | NOTES/COMMENTS: |
|---|---|---|---|
| TPM | | | |

Despite any clause to the contrary, the Contractor represents and warrants that its services hereunder shall be performed by competent personnel and shall be of professional quality consistent with generally accepted industry standards for the performance of such services and shall comply in all respects with the requirements of this Contract. For any breach of this warranty, the Contractor shall, for a period of ninety (90) days from performance of the service, perform the services again, at no cost to Customer, or if Contractor is unable to perform the services as warranted, Contractor shall reimburse Customer the fees paid to Contractor for the unsatisfactory services. The rights and remedies of the parties under this warranty are in addition to any other rights and remedies of the parties provided by law or equity, including, without limitation actual damages, and, as applicable and awarded under the law, to a prevailing party, reasonable attorneys' fees and costs.

## IV. PAYMENT

### A. PROHIBITION AGAINST ADVANCE PAYMENT (Statutory)

Neb. Rev. Stat. § 81-2403 states "[n]o goods or services shall be deemed to be received by an Agency until all such goods or services are completely delivered and finally accepted by the Agency" Standard term is to pay after deliverables and that any alteration of that standard term should be carefully considered and used only when absolutely necessary to accommodate certain critical exceptions, i.e. insurance premiums, etc. that must be paid in advance.)

Neb. Rev. Stat. § 81-2403 states, "[n]o goods or services shall be deemed to be received by an Agency until all such goods or services are completely delivered and finally accepted by the Agency."

### B. TAXES (Statutory)

The State is not required to pay taxes and assumes no such liability as a result of this solicitation. The Contractor may request a copy of the Nebraska Department of Revenue, Nebraska Resale or Exempt Sale Certificate for Sales Tax Exemption, Form 13 for their records. Any property tax payable on the Contractor's equipment which may be installed in a state-owned facility is the responsibility of the Contractor.

### C. INVOICES

Invoices for payments must be submitted by the Contractor to the Agency requesting the services with sufficient detail to support payment. The Terms and Conditions included in the Contractor's invoice shall be deemed to be solely for the convenience of the parties. No terms or conditions of any such invoice shall be binding upon the State, and no action by the State, including without limitation the payment of any such invoice in whole or in part, shall be construed as binding or estopping the State with respect to any such term or condition, unless the invoice term or condition has been previously agreed to by the State as an amendment to the contract.

### D. INSPECTION AND APPROVAL

| Accept (Initial) | Reject (Initial) | Reject & Provide Alternative (Initial) | NOTES/COMMENTS: |
|---|---|---|---|
| | | | |

Final inspection and approval of all work required under the contract shall be performed by the designated State officials.

The State and/or its authorized representatives shall have the right to enter any premises where the Contractor or Subcontractor duties under the contract are being performed, and to inspect, monitor or otherwise evaluate the work being performed. All inspections and evaluations shall be at reasonable times and in a manner that will not unreasonably delay work.

### E. PAYMENT (Statutory)

Payment will be made by the responsible Agency in compliance with the State Prompt Payment Act (See Neb. Rev. Stat. § 81-2403). The State may require the Contractor to accept payment by electronic means such as ACH deposit. In no event shall the State be responsible or liable to pay for any goods and services provided by the Contractor prior to the Effective Date of the contract, and the Contractor hereby waives any claim or cause of action for any such services.

### F. LATE PAYMENT (Statutory)

The Contractor may charge the responsible Agency interest for late payment in compliance with the State Prompt Payment Act (See Neb. Rev. Stat. §§ 81-2401 through 81-2408).

### G. SUBJECT TO FUNDING / FUNDING OUT CLAUSE FOR LOSS OF APPROPRIATIONS (Statutory)

The State's obligation to pay amounts due on the Contract for a fiscal years following the current fiscal year is contingent upon legislative appropriation of funds. Should said funds not be appropriated, the State may terminate the contract with respect to those payments for the fiscal year(s) for which such funds are not appropriated. The State will give the Contractor written notice 30 calendar days prior to the effective date of termination. All obligations of the State to make payments after the termination date will cease. The Contractor shall be entitled to receive just and equitable compensation for any authorized work which has been satisfactorily completed as of the termination date. In no event shall the Contractor be paid for a loss of anticipated profit.

**H. RIGHT TO AUDIT**

The State shall have the right to audit the Contractor's performance of this contract upon a 30 day written notice. Contractor shall utilize generally accepted accounting principles, and shall maintain the accounting records, and other records and information relevant to the contract (Information) to enable the State to audit the contract. (Neb. Rev. Stat. § 84-304 et seq.). The State may audit and the Contractor shall maintain the information during the term of the contract and for a period of five (5) years after the completion of this contract or until all issues or litigation are resolved, whichever is later. The Contractor shall make the Information available to the State at Contractor's place of business or a location acceptable to both Parties during normal business hours. If this is not practical or the Contractor so elects, the Contractor may provide electronic or paper copies of the Information. The State reserves the right to examine, make copies of, and take notes on any Information relevant to this contract, regardless of the form or the Information, how it is stored, or who possesses the Information. In no circumstances will Contractor be required to create or maintain documents not kept in the ordinary course of Contractor's business operations, nor will Contractor be required to disclose any information, including but not limited to product cost data, which is confidential or proprietary to Contractor.

| Accept (Initial) | Reject (Initial) | Reject & Provide Alternative (Initial) | NOTES/COMMENTS: |
|---|---|---|---|
| JGM | | | |

The Parties shall pay their own costs of the audit unless the audit finds a previously undisclosed overpayment by the State. If a previously undisclosed overpayment exceeds one-half of one percent (.5%) of the total contract billings, or if fraud, material misrepresentations, or non-performance is discovered on the part of the Contractor, the Contractor shall reimburse the State for the total costs of the audit. Overpayments and audit costs owed to the State shall be paid within 90 days of written notice of the claim. The Contractor agrees to correct any material weaknesses or condition found as a result of the audit.

## V. SCOPE OF WORK

The Contractor must provide the following information in response to this solicitation.

### A. SCOPE

It is the intent of this Bid invitation to establish a contract to supply **Truck Tractor Chassis with Tandem Rear Axle** per the attached specifications from date of award for a period of Two (2) years with the option to renew for an additional Two (2) Two (2) year periods when mutually agreeable to the Contractor and the State. The State reserves the right to extend the period of this contract beyond the end date when mutually agreeable to the Contractor and the State.

All items proposed shall be of the latest manufacture in production as of the date of the solicitation and be of proven performance and under standard design complete as regularly advertised and marketed. All necessary materials for satisfactory performance of the supplies shall be incorporated into the **Truck Tractor Chassis with Tandem Rear Axle** whether or not they may be specifically mentioned below.

Complete specifications, manufacturer's current descriptive literature and/or advertising data sheets with cuts or photographs must be included with the proposal for the IDENTICAL items proposed. Any information necessary to show compliance with these specifications not given on the manufacturer's descriptive literature and/or advertising data sheets must be supplied in writing on or attached to the proposal document. If manufacturer's information necessary to show compliance with these specifications is not attached to the proposal document, the Contractor may be required to submit requested information within three (3) business days of a written request. Failure to submit requested descriptive literature or advertising data sheets may be grounds to reject the proposal.

## VI. TECHNICAL SPECIFICATIONS

### A. BIDDER INSTRUCTIONS

The Bidder must respond to each of the following statements. Specifications listed are minimum conditions that must be met in order for a Bidder to qualify for the award.

**"YES"** response means the Bidder guarantees they can meet this condition.

**"NO"** response means the Bidder cannot meet this condition and will not be considered.

**"NO & PROVIDE ALTERNATIVE"** responses should be used only with a narrative response in the **"NOTES/COMMENTS"** section explaining in detail any deviation from the Bidder's ability to meet the condition, and an explanation of how this would be determined to be an acceptable alternative to meeting the condition. Alternatives must be detailed in such a way that allows such deviations to be fully evaluated. The State shall determine at its sole discretion whether or not the Bidder's alternative is an acceptable alternative.

### B. NON-COMPLIANCE STATEMENT

| YES | NO | NO & PROVIDE ALTERNATIVE | |
|---|---|---|---|
| ✓ | | | **1.** Read these specifications carefully. Any and all exceptions to these specifications must be written on or attached to solicitation response. Any noncompliance may void your Bid. Non-compliance to any single specification can void your Bid. |
| ✓ | | | **2.** It is the responsibility of Contractors to obtain information and clarifications as provided below. The State is not responsible for any erroneous or incomplete understandings or wrongful interpretations of this solicitation by any Contractor. |
| ✓ | | | **3.** No interpretation related to the meaning of solicitation specifications or other pre-bid documents will be made orally to any Bidder by the State. Any solicitation interpretation must be put in writing by the Bidder and received at SPB by the last day to submit written questions per the Schedule of Events. (Inquiries received after the last day to submit written questions may not be addressed).<br><br>E-mail questions to SPB at as.materielpurchasing@nebraska.gov |
| **NOTES/COMMENTS:** | | | |

### C. BASIC SPECIFICATIONS

| YES | NO | NO & PROVIDE ALTERNATIVE | |
|---|---|---|---|
| ✓ | | | **1.** Tractor should be configured for regional service. |
| ✓ | | | **a.** The Tractor is to be used to pull a variety of vocational trailers owned by NDOT. |
| ✓ | | | **b.** The Tractor shall be no less than 54,000 Gross Vehicle Weight Rating (GVWR). |
| ✓ | | | **2.** Wheel Base: 190 " |
| ✓ | | | **a.** Shall be set back front axle design. |

| | | | | |
|---|---|---|---|---|
| ✓ | | | b. | Minimum 180", maximum not to exceed 200". |
| ✓ | | | c. | Cab to Trunnion shall be appropriate for wheelbase and a minimum of 100". |
| ✓ | | | 3. | BBC minimum of 112 inches. 111" |
| ✓ | | | 4. | RBM immediately behind cab shall at least 1,375,000 inch pounds. |
| ✓ | | | 5. | Front bumper required. |
| ✓ | | | 6. | Rear fenders to be quarter type with clearance for tire chains. |
| ✓ | | | 7. | Hood and fenders shall be tilt-forward design |
| **NOTES/COMMENTS:** | | | | |

**D. TRANSMISSION AND CLUTCH**

| YES | NO | NO & PROVIDE ALTERNATIVE | | |
|---|---|---|---|---|
| ✓ | | | 1. | Fuller 10 speed transmission or Equivalent with "C" rating or low end reduction, . |
| ✓ | | | a. | Six (6) bolt and Eight (8) bolt PTO openings. |
| ✓ | | | 2. | Synthetic lubricant in transmission. |
| ✓ | | | 3. | Clutch shall be minimum 15", double-plate ceramic type. |
| **NOTES/COMMENTS:** | | | | |

**E. SHOCK ABSORBERS**

| YES | NO | NO & PROVIDE ALTERNATIVE | | |
|---|---|---|---|---|
| ✓ | | | 1. | Front shock absorbers required |
| **NOTES/COMMENTS:** | | | | |

## F. AXLES AND SPRINGS

| YES | NO | NO & PROVIDE ALTERNATIVE | | |
|---|---|---|---|---|
| ✓ | | | 1. | Minimum 14,000 pound rated capacity in front axle with corresponding springs. |
| ✓ | | | | a. Oil Filled, Front Wheel Hubs with Window Required. |
| ✓ | | | 2. | Rear assembly shall be single or dual reduction type-tandem with Minimum 40,000 pound rated capacity. |
| ✓ | | | 3. | Front and Rear Springs shall meet manufacturer's GVWR requirements. |
| ✓ | | | | a. Front Springs to be of taper leaf design. |
| ✓ | | | 4. | Rear suspension shall be Hendricksen Primaxx Air Ride Suspension. |
| ✓ | | | 5. | Adequate gear ratios in axles and transmission must be available to achieve cruising speed of approximately 75 MPH. |
| ✓ | | | 6. | Axles to be driven by power divider with lockout. Switch to have indicator light. |
| ✓ | | | 7. | All axles shall contain synthetic lubricants. |
| ✓ | | | 8. | To Include a Suspension dump switch with indicator. |
| ✓ | | | 9. | Inter-axle wheel lock. Switch to have indicator light. |

**NOTES/COMMENTS:**

## G. STEERING

| YES | NO | NO & PROVIDE ALTERNATIVE | | |
|---|---|---|---|---|
| ✓ | | | 1. | Manufacturer's recommended power steering. |

**NOTES/COMMENTS:**

## H. BRAKES

| YES | NO | NO & PROVIDE ALTERNATIVE | | |
|---|---|---|---|---|
| ✓ | | | 1. | Service brakes shall be six (6) wheel, full air, with automatic slack adjusters. |
| ✓ | | | 2. | Two (2) shoes per wheel, double anchored when brakes are drum type. |
| ✓ | | | 3. | Disc, drum or any combination of disc drum acceptable.<br>**Specify Type of Brakes Provided:** DRUM FRT. + REAR |
| ✓ | | | 4. | Dust shields required. |
| ✓ | | | 5. | Anti-lock brake system four (4) channel required. |
| ✓ | | | 6. | Parking Brakes: |

| | | | |
|---|---|---|---|
| ✓ | | | a. On both rear axles. |
| ✓ | | | b. A spring loaded parking brake system designed to automatically apply parking brakes when pressure in main air reservoir falls below safe pressure with warning signal included. |
| ✓ | | | 7. The compressor shall be a single or two-stage water-cooled type with a Minimum flow of 12 CFM. |
| ✓ | | | 8. Bendix AD-IP dryer or OEM Equivalent<br>**Specify Brand of Dryer:** BW<br>**Specify Type/ Item # of Dryer:** AD 9 31 |
| ✓ | | | 9. Drain valve system for all air tanks must be conveniently operated from side of chassis. |
| ✓ | | | 10. Tractor shall be equipped with tractor protection air valve and coiled air hoses for trailer hook-up. |

**NOTES/COMMENTS:**

## I. ENGINE

| YES | NO | NO & PROVIDE ALTERNATIVE | |
|---|---|---|---|
| ✓ | | | 1. The Engine shall be Diesel, be a minimum of 12.8 Liter actual displacement with a rating of 425 HP and 1450 torque.<br><br>NO OTHER ENGINE WILL BE ACCEPTABLE without written approval by the NDOT five (5) days prior to Bid Opening. |
| ✓ | | | 2. Vertical Stack and Vertical Muffler Stack shall have a heat shield with 90 degree elbowed exhaust outlet that is a minimum of 12 inches above the top of the cab with least amount of loss CT. Elbowed exhaust outlet must be equivalent material and finished as stack. |
| ✓ | | | a. Elbowed exhaust outlet must be of equivalent material and finished as Stack. |
| ✓ | | | 3. Temperature controlled fan and fuel/water separator required. |
| ✓ | | | 4. Engine to be equipped with 110 volt AC engine coolant heater: |
| ✓ | | | a. Male receptacle with cover for electrical wire for engine heater is to be sturdily mounted. |
| ✓ | | | 5. **Engine Cold Starting Aid required. May be any of the following:**<br>a. Cartridge (to be furnished with warm engine cut off);<br>b. Glow plugs<br>c. Intake grid heater; or,<br>d. Computer engine control or Equivalent<br>**Specify Type of Engine Cold Starting Aid:** D |

**NOTES/COMMENTS:** 435 HP, 1550 Torque

J. FILTERS

| YES | NO | NO & PROVIDE ALTERNATIVE | | |
|---|---|---|---|---|
| ✓ | | | 1. | Includes disposable, Full Flow Oil filter. |
| ✓ | | | 2. | Dual Element Air Cleaner required. Donaldson Filtration Solutions or Equivalent.<br>**Specify Air Cleaner Brand:** DONALDSON |
| **NOTES/COMMENTS:** | | | | |

K. COOLING

| YES | NO | NO & PROVIDE ALTERNATIVE | | |
|---|---|---|---|---|
| ✓ | | | 1. | Manufacturer's heaviest duty cooling capacity radiator. |
| ✓ | | | 2. | Coolant filter if required by engine manufacturer. |
| ✓ | | | 3. | Trucks shall have Ethylene Glycol base antifreeze protection to minimum 34 degrees below zero Fahrenheit. |
| **NOTES/COMMENTS:** | | | | |

L. FUEL TANKS

| YES | NO | NO & PROVIDE ALTERNATIVE | | |
|---|---|---|---|---|
| ✓ | | | 1. | Total Fuel Tank capacity shall be a minimum of 150 GL and provided by dual step tanks or side mounted frame tanks of approximately equal capacity.<br>**Specify Fuel Tank Capacity:** 160 |
| ✓ | | | 2. | All Fuel Tanks, of any type, shall be regular accessory units as Shown And Listed In the Truck Manufacturer's Data Books. |
| ✓ | | | 3. | DEF tank to be mounted on driver's side of truck. |
| **NOTES/COMMENTS:** | | | | |

**M. WHEELS**

| YES | NO | NO & PROVIDE ALTERNATIVE | |
|---|---|---|---|
| ✓ | | | 1. Eleven (11) 22.5 inch by 8.25 inch steel disc wheels with ten (10) stud, hub-piloted steel disc with 11.25 inch diameter bolt circle. |
| ✓ | | | 2. Wheels should be identical in color, interchangeable and rear wheels and tires must be spaced to permit use of tire chains. |
| **NOTES/COMMENTS:** | | | |

**N. TIRES**

| YES | NO | NO & PROVIDE ALTERNATIVE | |
|---|---|---|---|
| ✓ | | | 1. Tires shall be: |
| ✓ | | | a. Steel belted radials of tubeless type. |
| ✓ | | | b. 11R22.5 14 ply on rear. |
| ✓ | | | c. 12R22.5 16 ply on front and spare. |
| ✓ | | | d. Front tires and spare shall have highway tread. |
| ✓ | | | e. Rear tires shall have traction tread design. |
| ✓ | | | 2. Tire brands shall be:<br>a. Goodyear;<br>b. Michelin; ✓<br>c. Bridgestone;<br>d. Firestone<br>e. Continental; or, ✓<br>f. General.<br>Tires shall carry said company name on sidewalls of tires<br>**Specify Brand of Tire Being Bid:** michelin FRT; CONTINENTAL RARA |
| **NOTES/COMMENTS:** michelin RATed for 75 MPH STEER<br>CONTINENTAL RATed for 75 mph DRIVES | | | |

O. CAB

| YES | NO | NO & PROVIDE ALTERNATIVE | |
|---|---|---|---|
| ✓ | | | 1. Air Suspension Cab with locks on doors. |
| ✓ | | | 2. National Brand Model 200 series or OEM Equivalent Seats: |
| ✓ | | | a. **Equivalent Brand/Model bid must be approved by NDOT**<br>**Specify Brand/Model Being Bid:**<br>NATIONAL 2000 HB Series |
| ✓ | | | b. High back seats with air lumbar support on both driver and passenger sides |
| ✓ | | | c. Seats to have cloth covering |
| ✓ | | | d. Seats must have the ability to adjust forwards and backwards on gliders |
| ✓ | | | e. Seats must be able to provide 6.5 inches of travel. |
| ✓ | | | f. Seat mounted arm rest outboard to be furnished on both driver and passenger seats. |
| ✓ | | | i. Molded outboard armrest on front door of truck is acceptable. |
| ✓ | | | 3. Seat mounted armrests, both inboard and outboard, to be furnished on both driver and passenger seats. If outboard arm rest is available by molded arm rest on door of truck, that is acceptable. |
| ✓ | | | 4. Power electric windows on both side windows. |
| ✓ | | | 5. Tinted safety glass in Cab. |
| ✓ | | | 6. Step or Running Board(s) shall be on each side of Cab. |
| ✓ | | | 7. Interior finished to exclude excessive noise and weather. |
| ✓ | | | 8. Exterior and Interior Cab Grab Handles shall be on both sides of truck to facilitate entry into the truck. |
| ✓ | | | a. Interior Grab Handles are acceptable only if Exterior Grab Handles are not included. |
| ✓ | | | 9. Air Suspension Cab required. |
| ✓ | | | 10. Tilt steering console required. |

**NOTES/COMMENTS:**

P. COLOR

| YES | NO | NO & PROVIDE ALTERNATIVE | |
|---|---|---|---|
| ✓ | | | 1. Truck will be highway safety yellow |
| ✓ | | | a. Contractor must provide a color chip for approval. |
| ✓ | | | 2. Paint will be base coat/clear coat acrylic, activator-hardened acrylic or polyurethane type. |
| NOTES/COMMENTS: | | | |

Q. MIRRORS

| YES | NO | NO & PROVIDE ALTERNATIVE | |
|---|---|---|---|
| ✓ | | | 1. Rear vision, rectangular Western Type or OEM mirrors with bright finish housing. |
| ✓ | | | 2. Size 16 inch by 7 inch (approximately 110 square inches). |
| ✓ | | | 3. Mirrors mounted on right and left doors of Cab, extendable to maximum legal width. OEM A pillar also acceptable. |
| ✓ | | | 4. Mirrors to be power adjustable and heated. |
| ✓ | | | 5. Minimum 8-inch convex mirror mounted on right and left side of truck below standard mirror. |
| NOTES/COMMENTS: | | | |

R. LIGHTS

| YES | NO | NO & PROVIDE ALTERNATIVE | |
|---|---|---|---|
| ✓ | | | 1. Lights to include halogen high beam headlights with low beam, OEM LED headlights also acceptable, parking light(s), dome light, double tail and stop lights and front and rear directional turn signal lights. |
| ✓ | | | a. Stop, Tail Turn and Marker lights to be LED. |
| NOTES/COMMENTS: | | | |

S. CONTROLS AND INSTRUMENTS

| YES | NO | NO & PROVIDE ALTERNATIVE | |
|---|---|---|---|
| ✓ | | | 1. To include key locking ignition switch, headlight, parking light and dome light switches, traffic hazard switch; headlight beam control, and speedometer. |
| ✓ | | | 2. To include voltmeter; oil pressure gauge, fuel gauge, engine temperature gauge, air pressure gauge. |

| | | | |
|---|---|---|---|
| ✓ | | | 3. To Include high beam indicator lights, flashing turn-indicator lights, two (2) sets of keys required per vehicle. Self-canceling turn signal switch on steering column. |
| ✓ | | | 4. Engine hour meter, tachometer and vacuum restriction gauge for air cleaner are required. |
| ✓ | | | a. Filter Minder brand dash mounted vacuum restriction gauge, or Equivalent, is acceptable if a vacuum restriction gauge on dash is not offered by Manufacturer.<br>**Specify Brand/Model being bid:**<br>Filter minder |
| ✓ | | | 5. Cruise control system with electronic engine idle control required. |
| **NOTES/COMMENTS:** | | | |

**T. WINDSHIELD WIPERS**

| YES | NO | NO & PROVIDE ALTERNATIVE | |
|---|---|---|---|
| ✓ | | | 1. Heaviest duty, dual, electric windshield washer with intermittent capacity to be included. |
| **NOTES/COMMENTS:** | | | |

**U. ELECTRICAL**

| YES | NO | NO & PROVIDE ALTERNATIVE | |
|---|---|---|---|
| ✓ | | | 1. 12 volt System, with a minimum of three (3) batteries included. |
| ✓ | | | 2. Manufacturer's recommended batteries for a diesel engine to be a minimum of 2200 CCA. |
| ✓ | | | 3. Alternator: |
| ✓ | | | a. Alternator shall be a Delco 28Si, or Equivalent. |
| ✓ | | | b. **Equivalent Brand/Model bid must be approved by NDOT**<br>**Specify Brand/Model Being Bid:**<br>Delco 28 Si |
| ✓ | | | c. Alternator of a minimum 160 amperes required. |
| **NOTES/COMMENTS:** | | | |

## V. FIFTH WHEEL ASSEMBLY

| YES | NO | NO & PROVIDE ALTERNATIVE | | |
|---|---|---|---|---|
| ✓ | | | 1. | Fifth wheel assembly required. |
| ✓ | | | 2. | Holland or Fontaine brand<br>**Specify Fifth Wheel Assembly:** Holland FW 35 |
| ✓ | | | 3. | 24 inch adjustable air slide for a two (2) inch pin required. |
| ✓ | | | 4. | Height of approximately 8.5 inches. |
| ✓ | | | 5. | Cast steel type "A" lock, right side release. |

**NOTES/COMMENTS:**

## W. GENERAL

| YES | NO | NO & PROVIDE ALTERNATIVE | | |
|---|---|---|---|---|
| ✓ | | | 1. | Single electric and dual air horns and two (2) padded sun visors included. |
| ✓ | | | 2. | Truck manufacturer's recommended outside air intake heater with entire windshield defroster and power outlet on dash. |
| ✓ | | | 3. | Manufacturer's standard manually controlled air conditioning. |
| ✓ | | | 4. | Seat belts for right and left seats with lap/shoulder retractors. |
| ✓ | | | 5. | Factory installed AM/FM radio, preferable with antenna mounted on cowling instead of top of Cab. |
| ✓ | | | 6. | Mud flaps must be furnished and mounted as required by FMCSA |
| ✓ | | | 7. | Dealer nameplate(s) and sign(s) shall not face to rear of unit. |
| ✓ | | | 8. | Truck tractor to be wired with 7-way ATA trailer outlet connection for semi-trailer lights and turn signals. |
| ✓ | | | 9. | Coiled electrical line required. |

**NOTES/COMMENTS:**

## X. RADIO FREQUENCY SHIELDING – Caution !!

| YES | NO | NO & PROVIDE ALTERNATIVE | | |
|---|---|---|---|---|
| ✓ | | | 1. | The chassis and/or installed components and equipment shall be compatible with use of NDOT mobile and/or two-way communications devices. Main communication radio operates in low band range of 47 MHz to 48 MHz, but all frequencies apply including low band, high band, UHF and VHF. |

| | | | | |
|---|---|---|---|---|
| ✓ | | | 2. | The chassis and/or installed components and equipment shall be manufactured to meet all current SAE and/or ISO Standards applicable and/or relevant to Electromagnetic Compatibility. |
| ✓ | | | 3. | NDOT will conduct testing of radio/two-way when installed in chassis. NDOT will notify Contractor if normal operational parameters are not met due to degradation of signals caused by electromagnetic emissions from chassis of installed components and equipment. Contractor shall be required to work with NDOT personnel to reduce interference level to a point acceptable to NDOT normal radio operating parameters.<br><br>Contractor shall have 30 days to resolve radio frequency interference issue. |
| ✓ | | | 4. | Contractor and/or manufacturer will be responsible for any and all cost to replace and/or modify any parts found to cause radio frequency interference. If NDOT and Contractor cannot resolve source of radio frequency interference the unit will be sent to and independent accredited lab for testing to ensure SAE and/or ISO Standards compliance. Testing shall be done to SAE and/or ISO standards which were current at date of bid. Should the chassis and/or installed components and equipment fail testing at the accredited lab, the Contractor shall be responsible for all cost incurred for testing. |
| ✓ | | | 5. | If, after testing by NDOT and/or accredited lab, the Contractor is unable or unwilling to incur the cost and correct the radio frequency interference issue to the satisfaction of NDOT, all orders And corresponding Contract will be canceled. |
| **NOTES/COMMENTS:** | | | | |

**Y. WARRANTY**

| YES | NO | NO & PROVIDE ALTERNATIVE | | |
|---|---|---|---|---|
| ✓ | | | 1. | The manufacturer's regular warranty certificate will be required with each unit delivered and the warranty shall apply, in all cases, with the following exceptions: |
| ✓ | | | a. | Manufacturer's written warranty including engine, transmission and differential must accompany delivered units. |
| ✓ | | | b. | Full, manufacturer's warranty coverage will be required for the stated warranty period, beginning at assignment date, in addition to the time between delivery and field assignment. Warranty delay sheet to be completed by Contractor. |
| ✓ | | | c. | Prior to the awarding of, or entering into any agreement or contract, it shall be the responsibility of the manufacturer and/or the successful bidder to warrant to the State, in writing, that it has factory authorized dealers in the State who will provide warranty/service and repair work without undue delay. |
| ✓ | | | d. | It is understood that the bidder accepts the above warranty requirements when offering a bid. |
| ✓ | | | e. | NDOT warranty form to be completed by Contractor. Failure to complete for will result in a $500.00 deduct. |
| **NOTES/COMMENTS:** | | | | |

## Z. SERVICE

| YES | NO | NO & PROVIDE ALTERNATIVE | | |
|---|---|---|---|---|
| ✓ | | | 1. | Manufacturer's standard warranty, completed pre-delivery inspection certificate, Manufacturer's Statement of Origin and line sheet will be required with each unit delivered. |
| ✓ | | | 2. | Service policy shall be honored by all of the manufacturer's authorized dealers in the State. |
| ✓ | | | 3. | Dealer's decals, stickers, or other signs shall not be put on units; manufacturer's nameplates, stampings and other similar signs are acceptable. |
| NOTES/COMMENTS: | | | | |

## AA. MANUALS

| YES | NO | NO & PROVIDE ALTERNATIVE | | |
|---|---|---|---|---|
| ✓ | | | 1. | Owner's/operator's manual must accompany each unit delivered. |
| ✓ | | | 2. | Service and Parts manual for chassis and engine. May be in a printed format, CD-ROM, Flash drive or online. If online access will be given free of charge for 12 years. |
| ✓ | | | 3. | All manuals must be furnished prior to payment and delivered to Fleet Management, Equipment Data Coordinator. |
| ✓ | | | 4. | Failure to deliver all manuals that are ordered may result in non-payment of ten percent (10%) of purchase order total, until all manuals are delivered. |
| NOTES/COMMENTS: | | | | |

## BB. SPECIFICATION FORM

| YES | NO | NO & PROVIDE ALTERNATIVE | | |
|---|---|---|---|---|
| ✓ | | | 1. | "Specification Form(s)" will be provided by NDOT to the Contractor when a purchase order is issued. |
| ✓ | | | 2. | The Contractor will be required to complete the "Specification Form(s)" for each unit, to the fullest extent possible, and must accompany each unit when delivered. |
| ✓ | | | 3. | If the Contractor does not properly complete the "Specification Form(s)" for each unit, a sum of $500.00 per unit will be deducted from the purchase order total. |
| NOTES/COMMENTS: | | | | |

## CC. DELIVERY LOCATIONS, INSTRUCTIONS AND PAYMENT

| YES | NO | NO & PROVIDE ALTERNATIVE | | |
|---|---|---|---|---|
| ✓ | | | 1. | After Contractor completes pre-delivery service, Contractor shall deliver the unit to:<br><br>Nebraska Department of Transportation (NDOT)<br>5001 South 14th Street<br>Lincoln, NE 68512<br><br>Delivery between 9:00 am and 3:00 pm Monday through Friday, excluding State and Federal holidays. |
| ✓ | | | 2. | Each unit shall be delivered with no less than ten (10) gallons of fuel in tanks. |
| ✓ | | | 3. | Contractor must notify NDOT Fleet Management a minimum of 24 hours prior to delivery of units to NDOT Monday through Friday, excluding State and Federal holidays:<br><br>NDOT Fleet Management contacts are:<br><br>a. (402) 479-4319<br>b. (402) 479-4323 |
| ✓ | | | 4. | Manufacturer's Statement of Origin and other pertinent purchasing documents must accompany the invoice. |
| NOTES/COMMENTS: | | | | |

## DD. MOTOR VEHICLE INDUSTRIES REGULATION ACT

| YES | NO | NO & PROVIDE ALTERNATIVE | | |
|---|---|---|---|---|
| ✓ | | | 1. | All Contractors must comply with the licensing requirements for motor vehicle dealers established under the Motor Vehicle Industries Regulation Act, Nebraska Revised Statutes, Chapter 60, Article 14 at time of Bid. Bid s will only be accepted from Contractors who are fully compliant with the Motor Vehicle Industries Regulation Act, Chapter 60, Article 14. |
| NOTES/COMMENTS: | | | | |

## EE. ANNUAL USAGE, ESTIMATED

| YES | NO | NO & PROVIDE ALTERNATIVE | | |
|---|---|---|---|---|
| ✓ | | | 1. | Annual usage figures provided are estimates and are not to be construed as either a minimum or maximum purchase quantity. The orders shall be for the actual quantities of each item ordered by or for any Agency during the life of the contract. Contractor shall not impose minimum order requirements. |

| | | | |
|---|---|---|---|
| ✓ | | | 2. Estimated Annual Usage 1-2 units. |
| NOTES/COMMENTS: | | | |

**FF. USAGE REPORT**

| YES | NO | NO & PROVIDE ALTERNATIVE | |
|---|---|---|---|
| ✓ | | | 1. The Contractor shall, upon request from SPB at any time as determined by the State, provide a Usage Report of this Contract by State Agencies and Political Subdivisions. SPB will determine the reporting period for the Usage report. Information may include:<br><br>**a.** Agency or Political Subdivision name;<br>**b.** Item description;<br>**c.** Item number;<br>**d.** Item dollar amount;<br>**e.** Number of orders received;<br>**f.** Orders processed;<br>**g.** Back orders; and,<br>**h.** Partially filled orders. |
| NOTES/COMMENTS: | | | |

**GG. DELIVERY ARO**

| YES | NO | NO & PROVIDE ALTERNATIVE | |
|---|---|---|---|
| | | | 1. Delivery desired within 90 days after receipt of order(s).<br>**Specify ARO:** 75 + 110 days |
| NOTES/COMMENTS: | | | |

**HH. ORDERS**

| YES | NO | NO & PROVIDE ALTERNATIVE | |
|---|---|---|---|
| ✓ | | | 1. Orders will be placed through e-mail |
| ✓ | | | 2. All orders must reference a purchase order number and the purchase order number must be referenced on the packing slip, and invoice. Invoices are to be sent to the "Invoice to" address on the purchase order. |
| NOTES/COMMENTS: | | | |

## II. QUALITY

| YES | NO | NO & PROVIDE ALTERNATIVE | | |
|---|---|---|---|---|
| ✓ | | | 1. | Product quality must meet specifications and be consistent for the term of the contract. All materials must be of first quality, under standard production by the manufacturer and be of standard design, complete as regularly advertised and marketed and be of proven performance. |
| ✓ | | | 2. | A guarantee of satisfactory performance by the Contractor and meeting delivery dates are considered to be an integral part of the purchase contract resulting from this Bid invitation. |
| ✓ | | | 3. | Products are to be fully guaranteed and may be returned for full credit or replacement (at the State's option) for any reason during the initial warranty period with no additional charges for shipping or restocking. |
| **NOTES/COMMENTS:** | | | | |

## JJ. AUTHORIZED DEALER & WARRANTY

| YES | NO | NO & PROVIDE ALTERNATIVE | | |
|---|---|---|---|---|
| ✓ | | | 1. | To the extent required by the manufacturer, the Contractor shall be an authorized dealer. Contractor may be required to substantiate that he/she is an authorized dealer. Proof, if required, must be submitted to SPB within three (3) business days of the request and prior to the award of any contract. |
| ✓ | | | 2. | The terms of the original manufacturer's standard warranty shall apply to all equipment acquired from this solicitation for the entire warranty period. |
| **NOTES/COMMENTS:** | | | | |

WESTERN STAR

# 4700 SF SB

Truck and Tractor

Serious trucks.™

# ONE GREAT TRUCK GETS EVEN BETTER.

The name Western Star means more than quality and value. It means getting the job done, period. We created a workhorse with input from you – the people who actually do the jobs. So, we know the kind of situations these trucks are getting into and, more importantly, out of.

For more than 50 years, Western Star has been building trucks to take on the impossible. Trucks like the Western Star® 4700, purpose-built to be rugged and reliable, now with innovations that make it lighter, safer and more efficient. That's how you take a great performer and make it even better.

## WIN WITH WESTERN STAR

- Incredible driver comfort
- Purpose-built manufacturing
- Advanced safety features
- Proven power solutions
- Exceptional fuel efficiency
- Lightweight options
- Body builder-friendly engineering
- Excellent durability and uptime
- Unmatched support

# IN CONTROL, COMFORTABLY.

This truck is truly built around the driver. Inside, you'll find a modern dash with an easy-to-read instrument cluster, paired with a steering wheel and column with integrated controls that keep you in command. It's all in a cab that's 72 inches wide to make it a place where you'll love to work every day.

## UPDATED INSTRUMENT CLUSTER

- Gauges that provide more information to the driver in intuitive format
- A multi-function LCD readout that delivers the data and alerts your driver wants to see most

Heavy-duty switches allow customers to customize switch function on a per switch basis.

RP1226-compliant telematics pre-wire allows you to use your own box.

Suspended clutch and brake pedals offer additional safety.

Hydraulic clutch control decreases pedal effort and driver fatigue.

Additional room between the kick panel and the clutch pedal lets you stretch out.

The dash comes ready for electronic device installation.

Dual USB ports and 12-volt outlet for digital connections and charging.

Optional ATC on/off switch disengages automatic traction control to help prevent trucks from getting stuck.

In-cab electrical panels with plug-in fuses or auto reset circuit breakers are easily accessible and help prevent possible damage.

## DOOR PANELS

- Durable surfaces that are easy to clean
- Deep storage pockets for easy access
- Strong handholds to help you get in and out safely

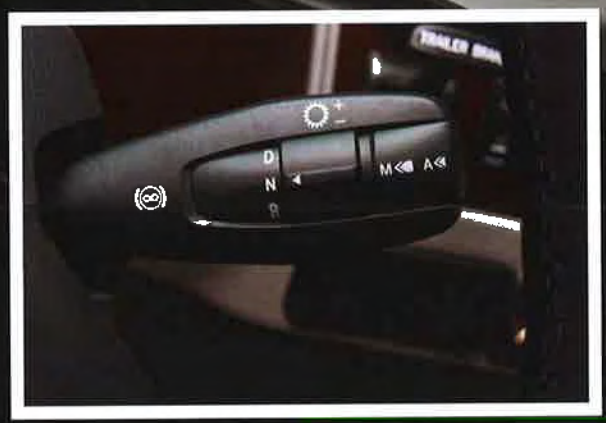

Optional, customer-configurable indicators with customized alert icons.

## STATE-OF-THE-ART LEATHER-WRAPPED STEERING WHEEL

- Bluetooth® hands-free connection for mobile phones
- Integrated controls for the stereo, cruise control and headlight interrupt so drivers can keep their hands on the wheel

## ADJUSTABLE STEERING COLUMN

- Full range of motion for increased driver comfort
- Left side: turn signal with integrated wiper
- Right side: easy-to-use transmission and engine brake control stalk (pictured)

# EXPERIENCE THE GREAT INDOORS.

The Western Star 4700 is built to be as inviting as it is functional. It all starts with our spacious cab, inside of which you'll find a number of innovations to make every day on the road or jobsite an unforgettable driving experience.

## 40-INCH SLEEPER

- Provides a comfortable place to rest during long shifts
- Extends hours of service and achieve mandatory off-duty time
- Honeycomb construction saves weight
- Provides increased insulation and sound resistance for greater comfort

## SEAT FABRIC OPTIONS

Vinyl

Mordura Cloth

Laredo Leather

## BASE INTERIOR

Gray

## PREMIUM INTERIOR

Obsidian Black

Smoky Mountain Gray

Prairie Buckskin

Maple Leaf Red

## INCREDIBLE QUALITY INSIDE AND OUT

From functional to luxurious, we have you – and your truck – covered. With vinyl that's thicker and more durable, Mordura cloth that's tough and stain-resistant, and the Laredo Leather option that's as rugged as it is good looking, you can create the space that works for you.

# THE SUM IS GREATER THAN ITS PARTS. AND THE PARTS ARE ALREADY GREAT.

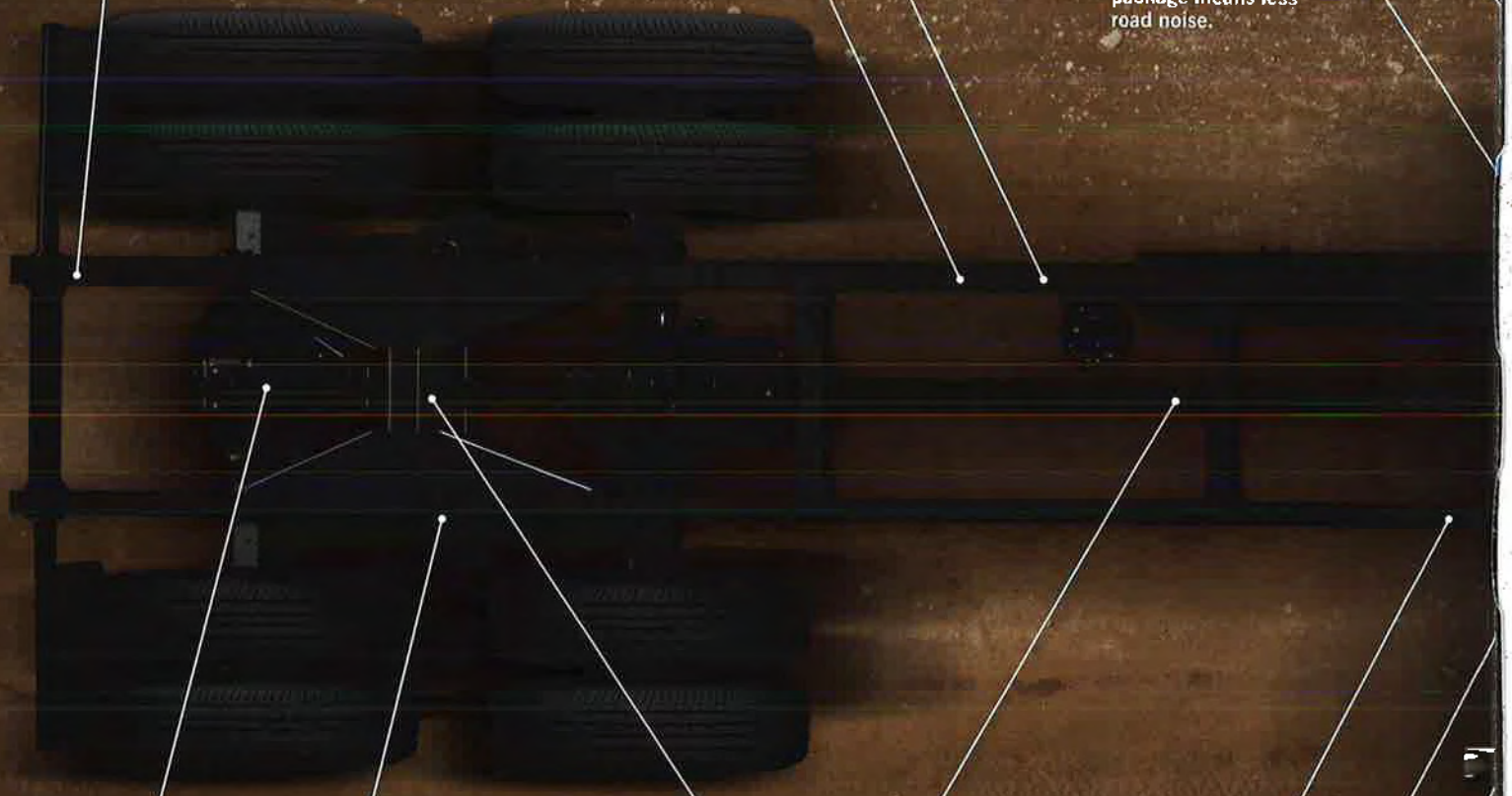

Air and electrical lines are suspended away from the frame rail and routed independently to minimize chafing and debris buildup.

Rubber fuel tank strap isolators prevent fuel tank roll.

Tractors feature heavy-duty, end-of-frame crossmember to minimize trailer damage.

Custom-pierced frame rails eliminate unnecessary holes that can compromise frame strength.

In-cab electrical panels help prevent corrosion and possible damage for greater vehicle uptime.

Standard insulation package means less road noise.

Multiple axle configurations available.

Numerous 5th wheel options to match your tractor application.

Standard Grade 8 fasteners add strength and allow easy repair in the field.

Half-round yokes for easy field maintenance.

Clean back-of-cab options for faster, easier body installations.

Shot-peened frame rails improve strength, longevity and durability.

Heavy-duty cab with multi-stage e-coat process for maximum strength, safety and corrosion resistance.

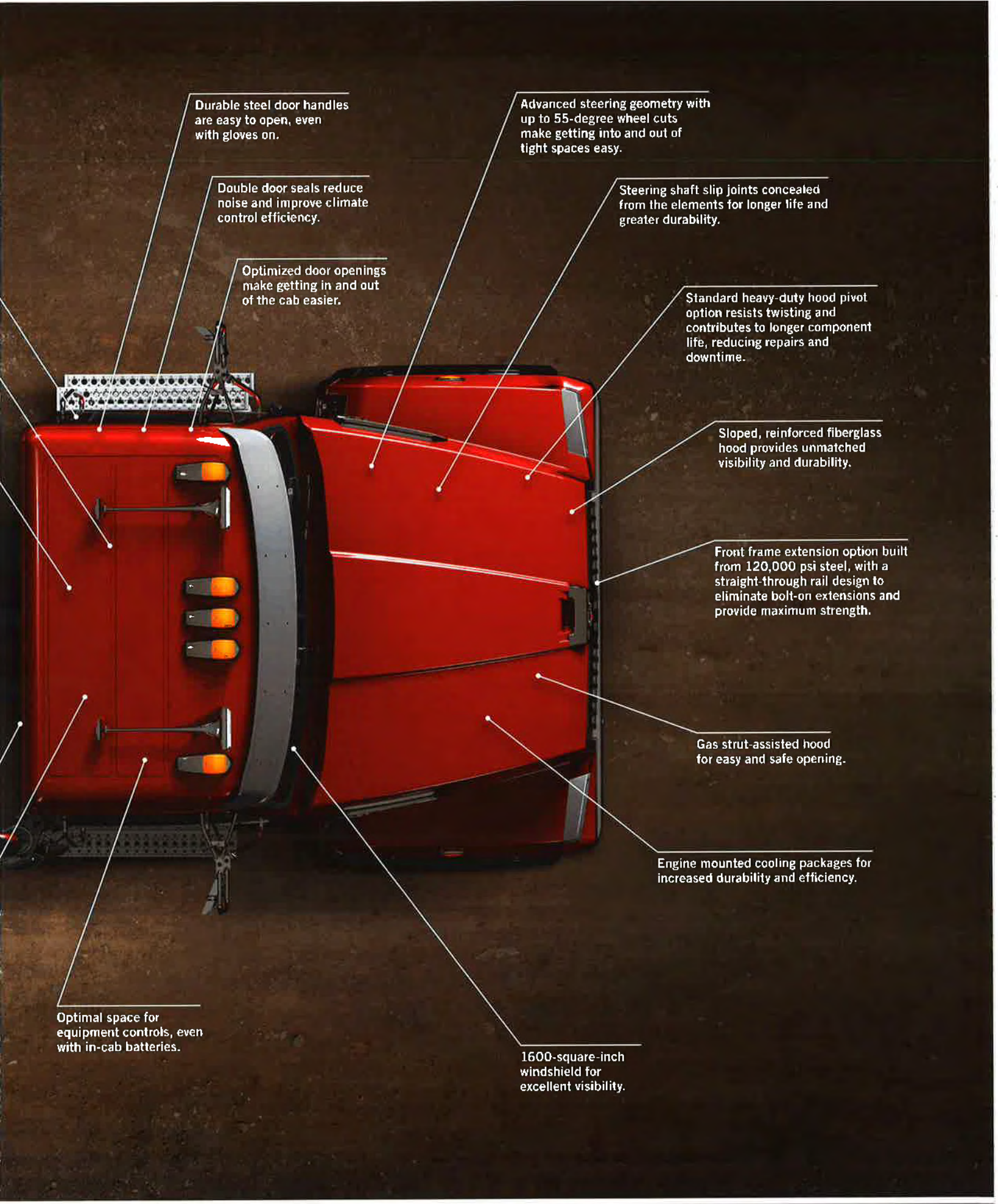
Durable steel door handles are easy to open, even with gloves on.
Double door seals reduce noise and improve climate control efficiency.
Optimized door openings make getting in and out of the cab easier.
Advanced steering geometry with up to 55-degree wheel cuts make getting into and out of tight spaces easy.
Steering shaft slip joints concealed from the elements for longer life and greater durability.
Standard heavy-duty hood pivot option resists twisting and contributes to longer component life, reducing repairs and downtime.
Sloped, reinforced fiberglass hood provides unmatched visibility and durability.
Front frame extension option built from 120,000 psi steel, with a straight-through rail design to eliminate bolt-on extensions and provide maximum strength.
Gas strut-assisted hood for easy and safe opening.
Engine mounted cooling packages for increased durability and efficiency.
Optimal space for equipment controls, even with in-cab batteries.
1600-square-inch windshield for excellent visibility.

# WE TAKE YOUR SAFETY SERIOUSLY.

There's no such thing as an afterthought on a Western Star. We analyzed every inch of the 4700 to find ways to make your job safer and easier. If it could be made safer or stronger, we made it happen. The result? A truck that's as safe as it is tough.

## THE WESTERN STAR CAB

- Welded for greater strength and safety
- Multi-stage e-coat dipped for corrosion resistance

## WIPER/HEADLIGHT ENGAGEMENT

For added safety, anytime the windshield wipers are turned on the 4700 automatically engages the headlights, making your truck more visible to those around you.

## INCREDIBLE VISIBILITY

The sloped hood on the 4700 looks good and helps you see even better. It opens up sightlines for greater visibility which, combined with a 110-inch BBC and wheel cut of up to 55 degrees, makes for great maneuverability on the jobsite.

## WABCO® ONGUARD™ COLLISION MITIGATION SYSTEM

This radar safety system detects objects and alerts drivers audibly, visually and physically, applying braking power and reducing engine torque to help diminish collision severity.

## ADAPTIVE CRUISE CONTROL (ACC)

ACC helps reduce driver fatigue by maintaining the set speed when the lane ahead is clear and automatically adjusting to maintain a safe following distance when a vehicle ahead is detected.

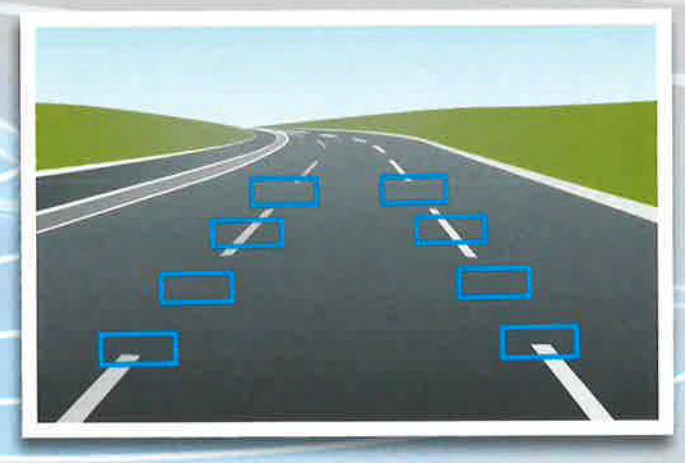

## LANE DEPARTURE WARNING SYSTEM (LDW)

Even experienced drivers can drift off course, which is why we have Lane Departure Warning. Audio alerts from the LDW system indicate if the truck is drifting left or right so that drivers can make the appropriate correction.

# THE POWER OF CHOICE.

With both Detroit™ and Cummins engine options, having enough power for your application is never a concern. Matching that power to the 110-inch BBC of the 4700 gives you a truck or tractor that packs plenty of punch in a small package.

## DETROIT™ DD13®

350-505HP, 1250-1850lb-ft.

Along with proven fuel efficiency, easy serviceability and an impressively broad torque curve, the DD13 also includes:

- A cooling system with shorter fan-on times for increased fuel efficiency
- A B50 life of 1 million miles
- A three-stage integrated Jacobs® engine brake for quieter engine braking and superior braking power
- Power Take-Off (PTO) availability for vocational applications
- A proprietary asymmetric turbocharger to improve performance
- An Amplified Common Rail System (ACRS™) to optimize combustion control

## CUMMINS X12

350-500HP, 1250-1700lb-ft.

Less weight means more freight. The X12 delivers all the power of a 13L with the weight of an 11L. The X12 offers:

- 600 pounds lighter than other medium-bore engines and 150 pounds less than the next lightest engine
- Revolutionary low-friction design for higher MPG
- Lower operating costs
- 90% of peak torque available in less than 1.5 seconds
- B50 life of 1 million miles
- Compatibility with a broad choice of fully automatic, AMT and manual transmissions

## CUMMINS L9

260-380HP, 720-1250lb-ft.

The L9 has a long track record of superior performance, reliability, safety and low maintenance, with features like:

- Superior drivability
- Excellent power-to-weight ratio
- VGT® Turbocharger for improved responsiveness and fuel economy
- XPI Fuel System for improved fuel efficiency and smoother operation
- Single Module Aftertreatment to save weight
- Single High-Capacity Electronic Control Module (ECM) for optimized performance

DETROIT™

Cummins®

# A SMOOTH TRANSFER OF POWER.

Every job has its own transmission needs. That's why we offer you a number of manual, automated manual and automatic options from Detroit, Eaton Fuller and Allison. Each one is engineered to deliver the dependability to keep your truck working hard.

### DETROIT™ DT12® AUTOMATED MANUAL TRANSMISSION

Strong, smooth and efficient, the DT12 is built to maximize uptime and efficiency with:

- Aluminum housing and single countershaft to help save weight, allowing for even more payload efficiency while still offering excellent durability
- Available proprietary rear-mounted Power Take-Off (PTO) that allows customers in Bulk Haul applications to operate tankers, aggregate trailers and walking floor trailers
- Creep Mode to improve low-speed maneuverability while also improving start-off traction in slippery conditions
- High-speed computer controlled shift and clutch actuators that select the best gear and shift pattern for fuel economy and driving conditions
- Increased safety through hill start aid, auto neutral and ergonomic control features

| TRANSMISSION |
| --- |
| Detroit™ DT12® |
| Eaton Fuller 10-, 11-, 13-, 15- and 18-speed |
| Eaton Fuller Ultrashift PLUS |
| Allison Automatic 3000, 3500, 4000, 4500, 4700 |

# BOOST UPTIME AND PROFITABILITY EVEN MORE.

### DETROIT™ CONNECT VIRTUAL TECHNICIAN℠

Our innovative feature saves time and money on costly repairs by:

- Transmitting critical engine fault data and diagnostics within minutes
- Identifying problems and letting you know whether to keep driving or stop immediately
- Collecting and reporting data in the Detroit Connect Portal, putting access and control at your fingertips
- Directing you to the nearest location with the needed parts in stock

DETROIT CONNECT

# LESS WEIGHT MEANS MORE PAYLOAD.

You need the performance of a heavy-duty vehicle. You just don't need the heavy. After all, the less your truck weighs, the more you can haul. That's why you can spec your 4700 to be one of the lightest without having to compromise. So, you'll not only save weight, you'll still get the power and durability that makes owning a Western Star a strong decision.

The underhood air cleaner removes up to 30 pounds of weight while improving aerodynamics and efficiency.

Multiple fuel and DEF tank options allow you to create the lightest possible configuration for your application.

The optional Cummins X12 is up to 600 pounds lighter than other medium-bore engines and 150 pounds lighter than the next lightest engine in its class.

Made from light and durable polished aluminum, our 14-inch tapered sweptback bumper offers the ultimate in weight savings and good looks.

# EASIER UPFIT SAVES YOU IN MORE WAYS THAN ONE.

We're not always the final stage of assembly on your truck, so we worked with those who are. Body builders helped us create a truck that's a dream to work with and work on, featuring body builder-specific options that reduce installation time, help ease maintenance and save you money. An extensive body builder book available. Ask your dealer for more details.

## THIRD POWER DISTRIBUTION MODULE (PDM)

- Greatly improves power capacity allowing for more switches and controls
- Incorporates a modern, more reliable circuit board design
- Conveniently located in place of the glovebox, providing more space between the seats

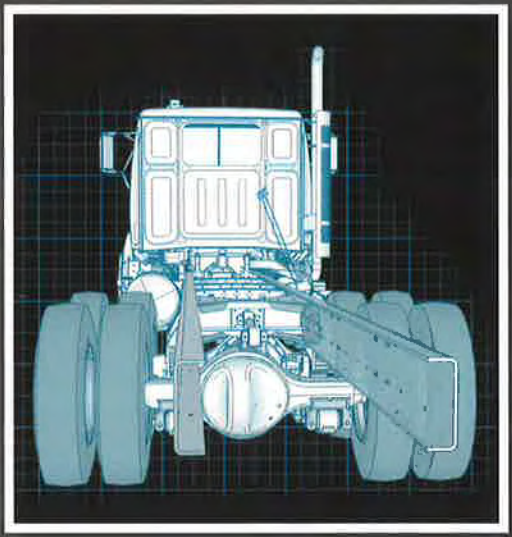

## SINGLE-CHANNEL FRAME RAILS

- Lightweight solution rated at 3.2M RBM
- Factory custom-drilled for your application for added strength and faster upfit
- Single-channel construction resists corrosion

## CLEAN BACK OF CAB

- No oddly placed stacks or brackets
- Easy to add the body you want
- Flexible exhaust options help save as much as a foot of chassis length

## PTO OPTIONS

- Front or rear engine PTO available
- SAE PTO options for Eaton and Allison transmissions
- Optional rear-mounted PTO on the Detroit™ DT12® for stationary applications
- Standard stationary grille for more convenient equipment installation

## CUSTOMER INTERFACE CONNECTION (CIC)

- Standardized, connector-based interface
- Reduces upfit time
- Allows for ease of finding a circuit/feature
- Located between the seat and the back wall

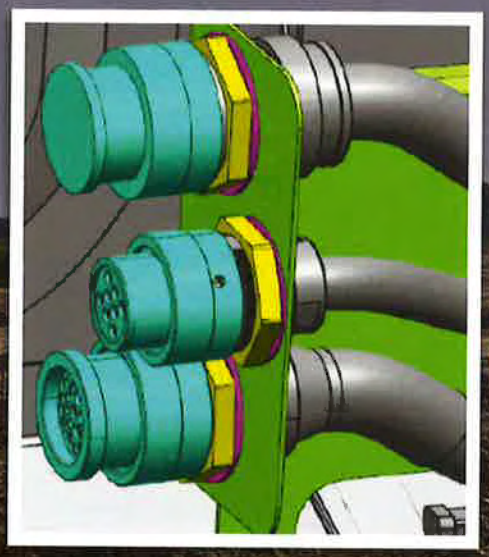

## BODY BUILDER-FRIENDLY POWER AND GROUND ACCESS

- Adds interface points throughout the vehicle for ground interfacing
- Adds heavy power interface to the front wall
- Can be pre-wired between the seats
- Offers ease of power access

## LASER-ETCHED WIRING

- Speeds installation time
- Eases circuit identification
- Simplifies electrical issue diagnosis

## REMOTE THROTTLE INTERFACE

- Allows body builder to increase or decrease the RPM
- Can be located between the seats, under the dash, in the engine compartment or on the back of the cab
- Provides the operator more options for controlling the equipment

## REMOTE START/STOP

- Allows you to start and stop the engine remotely
- Includes built-in safety features
- Offers customer flexibility of feature

# SERIOUS TRUCKS. SERIOUS SUPPORT.

Truck or tractor, the 4700 is a platform you can depend on for value and dependability for years to come. Comfort, efficiency, low cost of ownership. It's all there in a package that delivers day in and day out.

At both our flagship plant in Portland, Oregon, and our state-of-the-art Daimler plant in Cleveland, North Carolina, Western Star® trucks are assembled by hand, using the toughest Western Star components and the most advanced Daimler technology available. It's not the least expensive way to build a truck, but it is the Western Star way.

## EXTENSIVE PARTS AVAILABILITY

Our goal is to keep you working. That's why your dealer has an experienced service center team and carries a wide selection of parts, with access to an even greater variety through our expanding global network of parts distribution centers. You get the support you need to grow – no matter where you do business.

## COMPETITIVE FINANCING

Being part of the Daimler Truck Financial family means we can get you into the right truck at the right price with rates that are competitive with anyone, including banks. Plus, because we know the transportation and vocational business, it's simple to get the financing you need – and into the Western Star you want.

## COMPREHENSIVE WARRANTY

Every new Western Star comes with a limited warranty that covers defects in material and/or workmanship which will be repaired free of charge within the warranty period. For warranty claims or for a detailed explanation of warranty coverage, please contact your local dealer.

## ADVANCED CONNECTIVITY

As a part of Daimler Trucks North America, Western Star trucks are available with a number of connectivity features that can enhance your uptime and profitability. Real-time data allows you to make informed decisions that can help your business grow. Ask your dealer about what advanced connectivity can mean for you.

# VAST DEALER NETWORK

## ELITE SUPPORT

The ultimate goal of the Elite Support℠ Network is maximizing vehicle uptime. With Elite Support, you'll get:

- Consistent, high-standard service during every visit across our network
- Rapid diagnosis, responsive turnaround, consistent communication, robust parts availability and superb customer service
- Highly-trained technicians experienced in servicing all components of your vehicle
- Exceptional amenities and a comfortable environment for drivers as we work to get your truck back on the road

## EXPRESS ASSESSMENT

Because time is money, all Elite Support℠ Certified locations participate in Express Assessment. Express Assessment means that within 2 hours of service write-up, the dealer will communicate primary diagnosis, check parts availability and provide an estimate of cost and repair time to get you back on the road as soon as possible.

WESTERN STAR | Serious trucks.

# SF SB 4700

WESTERN STAR

4700SB available in All-Wheel Drive, see All-Wheel Drive Tech Sheet

## PROVEN PERFORMANCE. AND READY TO PROVE IT AGAIN.

We designed the 4700 to be as hard-working as every driver who climbs in the cab, with options for any size job. And if you don't see what you need, just ask your dealer.

## SF SET FORWARD AXLE

| | |
|---|---|
| A | BBC: 110" |
| B | WB: Up to 300" |
| C | BA: 29" |

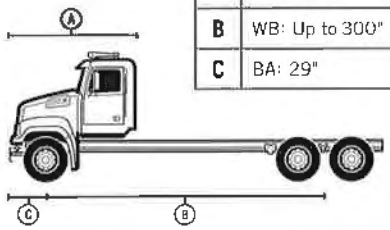


## SB SET BACK AXLE

| | |
|---|---|
| A | BBC: 110" |
| B | WB: Up to 300" |
| C | BA: 47" |

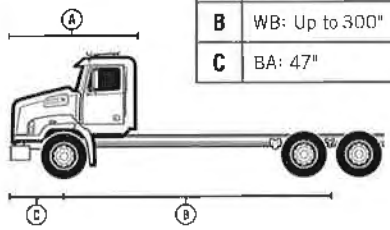


## SLEEPER

40" Low Roof and Ultra Low Roof with single bunk

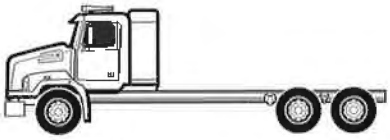

40" Low Roof Sleeper

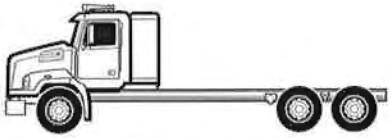

40" Ultra Low Roof Sleeper

## BODY BUILDER FEATURES

- Multiple clean back-of-cab configurations
- Dedicated floor channel to easily route harnesses
- Quick-access, bolt-in, pass-through plate in cab floor
- Standardized, connector-based body builder interface in the cab
- Standard in-cab batteries with optional frame mounts
- 3.2MM RBM single-channel frame rail
- Third Power Distribution Module
- Optional remote throttle interface
- Optional remote start and stop
- Multiple front and rear PTO options

## CAB

- Standard galvannealed steel with roped-in windshield
- Severe Duty galvannealed steel with roped-in or bonded windshield

## AIR INTAKE

- Optional pre-cleaners
- Optional inside/outside air with snow doors and dash switch control

## ENGINE

- Cummins L9, 260-380HP, 720-1250lb-ft.
- Cummins X12, 350-500HP, 1250-1700lb-ft.
- Detroit™ DD13®, 350-505HP, 1250-1850lb-ft.

## TRANSMISSION

- Detroit™ DT12®
- Eaton Fuller 10-, 11-, 13-, 15- and 18-speed
- Eaton Fuller Ultrashift PLUS
- Allison Automatic 3000, 3500, 4000, 4500, 4700

## FRONT AXLE

- Detroit™ single 12,000-23,000 lbs
- Meritor single 12,000-22,000 lbs
- Meritor front drive 16,000-18,000 lbs

## REAR AXLE

- Detroit™ tandem 40,000-46,000 lbs
- Meritor single 21,000-30,000 lbs
- Meritor tandem 40,000-52,000 lbs
- Detroit™ single 23,000 lbs

## FRONT SUSPENSION

- Taperleaf 12,000-20,000 lbs
- Flatleaf 14,600-23,000 lbs

## REAR SUSPENSION

- AirLiner® 21,000-46,000 lbs
- Hendrickson 40,000-52,000 lbs
- Chalmers 40,000-52,000 lbs
- TufTrac® 40,000-52,000 lbs
- Proprietary spring 23,000-30,000 lbs

## BRAKES

- WABCO® 4S/4M and 6S/6M Anti-lock Braking System (ABS) with and without traction enhancement
- Air Disc Brakes

## SAFETY

- Bendix AutoVue® lane departure warning system
- WABCO® OnGuard™ radar collision avoidance/mitigation system
- Adaptive cruise control

## FRAME

- Single-channel @ 2.6-3.2MM RBM
- Double-channel @ 3.7MM RBM
- Front frame extension – splayed 12" and 24"

## FUEL TANK

- Aluminum 23" and 25" cylindrical 50-100 gallon (189-379 liter)
- Steel rectangular 60 and 90 gallon (227 and 340 liter)

## DEF TANK

- 6, 13 and 23 gallon (23, 49 and 87 liter)

WESTERN STAR

For the Western Star dealer nearest you, call 1-866-850-STAR | **WESTERNSTAR.COM**

HAND BUILT IN THE USA
Cleveland, NC
Portland, OR

WS/MC-B-589. Specifications are subject to change without notice. Western Star Truck Sales, Inc. is registered to ISO 9001:2008 and ISO 14001:2004. Copyright © 2019 Daimler Trucks North America LLC. All rights reserved. Western Star Truck Sales, Inc. is a subsidiary of Daimler Trucks North America LLC, a Daimler company.

DAIMLER | Western Star - A Daimler Group Brand

WESTERN STAR

Vocational

## Enhanced Warranty

| Orders | On or After 3/8/2013 | |
|---|---|---|
| Name of warranty Coverage | Vocational | |
| Application Exclusions | None | |
| Surface | Up to 30% Off-Highway, Rough, maintained concrete/asphalt: maintained gravel/crushed rock: maintained dirt or soft soil (Class C or D Roads) | |
| GCW | 140,000 lbs / 63,505 kg or less, Doubles on NY turnpikes are rated 143,000 lbs, Doubles on FL turnpikes are rated 147,000 lbs | |
| Axles and Manufacturer's GVW Rating | | |
| 2-Axle limit (up to) | 48,000 lbs / 21,772 kg or less | |
| 3-Axle limit (up to) | 68,000 lbs / 30,844 kg or less | |
| 4-Axle limit (up to) | 88,000 lbs / 39,916 kg or less | |
| 5-Axles or more | 98,000 lbs / 44,452 kg or less | |
| Coverage | | |
| Description | Time [1] | Distance[1] |
| Basic Vehicle | 1 Year | Unlimited |
| Battery | 1 Year | 100,000 mi / 161,000 km |
| Brightwork | 6 Months | Unlimited |
| Cab Corrosion/Perforation | 5 Years | Unlimited |
| Cab Structure | 5 Years | Unlimited |
| Chassis Paint | 6 Months | Unlimited |
| Corrosion | 6 Months | Unlimited |
| Crossmembers | 5 Years | Unlimited |
| Diesel Emission 2010[2] | 5 Years | 100,000 mi / 161,000 km |
| Drivetrain | 2 Years | 100,000 mi / 161,000 km |
| Frame Rails | 5 Years | Unlimited |
| Paint | 1 Year | 100,000 mi / 161,000 km |
| Towing/Roadside Assistance[3] | 1 Year | Unlimited |

[1] Time or distance, whichever comes first

[2] Applies to vehicles equipped with EPA 2010 compliant diesel engines

[3] Up to a maximum of $550 per occurrence

The information provided in this document is for general information only and is not offered as customer's warranty. This coverage may be superseded without notification.

Copyright © Daimler Trucks North America LLC. All rights reserved. Daimler Trucks North America LLC is a Daimler company.

**Prepared for:**
Christina Kelly
NEBRASKA STATE OF
1526 K ST STE 130
LINCOLN, NE 68508
Phone: 402-471-2089

**Prepared by:**
Terry Novotny
Truck Center Companies
14321 CORNHUSKER RD
OMAHA, NE 68138
Phone:

*A proposal for*
***NEBRASKA STATE OF***

*Prepared by*
***Truck Center Companies***
*Terry Novotny*

*Jun 09, 2020*

# Western Star 4700SB

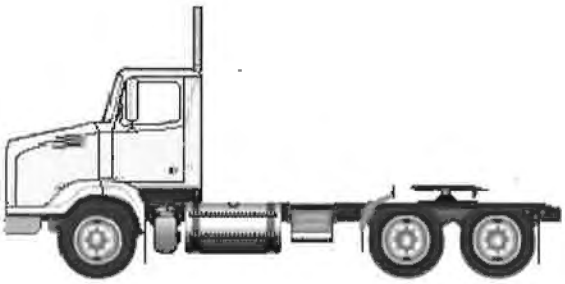

Components shown may not reflect all spec'd options and are not to scale

**Prepared for:**
Christina Kelly
NEBRASKA STATE OF
1526 K ST STE 130
LINCOLN, NE 68508
Phone: 402-471-2089

**Prepared by:**
Terry Novotny
Truck Center Companies
14321 CORNHUSKER RD
OMAHA, NE 68138
Phone:

# SPECIFICATION PROPOSAL

| Data Code | Description | Weight Front | Weight Rear |
|---|---|---|---|
| **Price Level** | | | |
| PRL-23T | WESTERN STAR 4700 PRL-23T (EFF:01/21/20) | | |
| **Data Version** | | | |
| DRL-019 | SPECPRO21 DATA RELEASE VER 019 | | |
| **Vehicle Configuration** | | | |
| 001-451 | 4700 SET-BACK FRONT AXLE CHASSIS | 9,215 | 6,480 |
| 004-221 | 2021 MODEL YEAR SPECIFIED | | |
| 002-002 | SET BACK AXLE - TRACTOR | 20 | |
| 019-005 | TRAILER TOWING PROVISION FORWARD OF FIFTH WHEEL | | |
| 003-001 | LH PRIMARY STEERING LOCATION | | |
| **General Service** | | | |
| AA1-001 | TRACTOR/TRAILER CONFIGURATION | | |
| AA6-001 | DOMICILED, USA 50 STATES (INCLUDING CALIFORNIA AND CARB OPT-IN STATES) | | |
| A85-010 | UTILITY/REPAIR/MAINTENANCE SERVICE | | |
| A84-1GM | GOVERNMENT BUSINESS SEGMENT | | |
| AA4-006 | HEAVY EQUIPMENT COMMODITY | | |
| AA5-002 | TERRAIN/DUTY: 100% (ALL) OF THE TIME, IN TRANSIT, IS SPENT ON PAVED ROADS | | |
| AB1-008 | MAXIMUM 8% EXPECTED GRADE | | |
| AB5-002 | ROUGH, MAINTAINED, CONCRETE OR ASPHALT PAVEMENT - MOST SEVERE IN-TRANSIT (BETWEEN SITES) ROAD SURFACE | | |
| 995-1A5 | WESTERN STAR VOCATIONAL WARRANTY | | |
| A66-99D | EXPECTED FRONT AXLE(S) LOAD : 14000.0 lbs | | |
| A68-99D | EXPECTED REAR DRIVE AXLE(S) LOAD : 40000.0 lbs | | |
| A63-99D | EXPECTED GROSS VEHICLE WEIGHT CAPACITY : 54000.0 lbs | | |
| A70-99D | EXPECTED GROSS COMBINATION WEIGHT : 80000.0 lbs | | |

**Prepared for:**
Christina Kelly
NEBRASKA STATE OF
1526 K ST STE 130
LINCOLN, NE 68508
Phone: 402-471-2089

**Prepared by:**
Terry Novotny
Truck Center Companies
14321 CORNHUSKER RD
OMAHA, NE 68138
Phone:

| Data Code | Description | Weight Front | Weight Rear |
|---|---|---|---|
| **Truck Service** | | | |
| AF3-2CR | TRACTOR ONLY WITH NO BODY UPFIT | | |
| **Tractor Service** | | | |
| AA2-009 | LOWBOY TRAILER | | |
| AH6-001 | SINGLE (1) TRAILER | | |
| **Engine** | | | |
| 101-2X8 | DETROIT DD13 12.8L 435 HP @ 1625 RPM, 1900 GOV RPM, 1550 LB/FT @ 975 RPM | | |
| **Electronic Parameters** | | | |
| 79A-075 | 75 MPH ROAD SPEED LIMIT | | |
| 79B-000 | CRUISE CONTROL SPEED LIMIT SAME AS ROAD SPEED LIMIT | | |
| 79E-004 | LIMIT TO ENGINE RATING MINUS 100 LB-FT IN ALL GEARS EXCEPT TOP 2 | | |
| 79G-006 | 5 MINUTES IDLE SHUTDOWN WITH CLUTCH AND SERVICE BRAKE OVERRIDE | | |
| 79K-007 | PTO MODE ENGINE RPM LIMIT - 1100 RPM | | |
| 79M-002 | PTO MODE BRAKE OVERRIDE - SERVICE BRAKE APPLIED OR PARK BRAKE NOT APPLIED | | |
| 79N-001 | PTO MODE CLUTCH OVERRIDE - CLUTCH ENABLED | | |
| 79P-005 | PTO RPM WITH CRUISE SET SWITCH - 1000 RPM | | |
| 79Q-006 | PTO RPM WITH CRUISE RESUME SWITCH - 1050 RPM | | |
| 79S-001 | PTO MODE CANCEL VEHICLE SPEED - 5 MPH | | |
| 79T-001 | PTO MODE RPM INCREMENT - 25 RPM | | |
| 79U-007 | PTO GOVERNOR RAMP RATE - 250 RPM PER SECOND | | |
| 79W-001 | ONE REMOTE PTO SPEED | | |
| 79X-005 | PTO SPEED 1 SETTING - 900 RPM | | |
| 80D-001 | SOFT CRUISE CONTROL ENABLED | | |
| 80G-001 | PTO MINIMUM RPM - 600 | | |
| 80K-001 | TEMPERATURE OVERRIDE BELOW 20 DEGREES AND ABOVE 70 DEGREES AMBIENT TEMPERATURE | | |
| 80L-001 | ENABLE AUTO ENGINE RPM ELEVATE FOR EXTENDED IDLE | | |
| **Engine Equipment** | | | |
| 99C-017 | 2016-2019 ONBOARD DIAGNOSTICS/2010 EPA/CARB/FINAL GHG17 CONFIGURATION | | |

**Prepared for:**
Christina Kelly
NEBRASKA STATE OF
1526 K ST STE 130
LINCOLN, NE 68508
Phone: 402-471-2089

**Prepared by:**
Terry Novotny
Truck Center Companies
14321 CORNHUSKER RD
OMAHA, NE 68138
Phone:

| Data Code | Description | Weight Front | Weight Rear |
|---|---|---|---|
| 99D-011 | 2008 CARB EMISSION CERTIFICATION - CLEAN IDLE (INCLUDES 6X4 INCH LABEL ON LOWER FORWARD CORNER OF DRIVER DOOR) | | |
| 13E-001 | STANDARD OIL PAN | | |
| 105-001 | ENGINE MOUNTED OIL CHECK AND FILL | | |
| 133-004 | ONE PIECE VALVE COVER | | |
| 014-1B5 | SIDE OF HOOD AIR INTAKE WITH DONALDSON HIGH CAPACITY AIR CLEANER WITH Safety ELEMENT, FIREWALL MOUNTED | | |
| 124-1D7 | DR 12V 160 AMP 28-SI QUADRAMOUNT PAD ALTERNATOR WITH REMOTE BATTERY VOLT SENSE | | |
| 292-236 | (3) DTNA GENUINE, FLOODED STARTING, MIN 3000CCA, 555RC, THREADED STUD BATTERIES | -10 | |
| 290-017 | BATTERY BOX FRAME MOUNTED | 35 | |
| 282-003 | SINGLE BATTERY BOX FRAME MOUNTED LH SIDE BACK OF CAB | | |
| 291-017 | WIRE GROUND RETURN FOR BATTERY CABLES WITH ADDITIONAL FRAME GROUND RETURN | | |
| 289-001 | NON-POLISHED BATTERY BOX COVER | | |
| 293-072 | POSITIVE LOAD DISCONNECT WITH DASH MOUNTED CONTROL SWITCH | 8 | |
| 295-029 | POSITIVE AND NEGATIVE POSTS FOR JUMPSTART LOCATED ON FRAME NEXT TO STARTER | 2 | |
| 306-020 | LOW VOLTAGE BATTERY DISCONNECT AT 12.1 VOLTS FOR ISOLATED CIRCUITS WITH LOCAL ALARM | | |
| 180-100 | EATON ADVANTAGE 15-1/2 INCH SELF ADJUSTING CLUTCH | -40 | |
| 183-008 | TORQUE LIMITING CLUTCH BRAKE | | |
| 181-002 | ZERK FITTING WITH EXTENSION HOSE AT CLUTCH RELEASE BEARING | | |
| 182-005 | HYDRAULIC CLUTCH CONTROL | | |
| 107-044 | BW MODEL BA-921 19.0 CFM SINGLE CYLINDER AIR COMPRESSOR WITH SAFETY VALVE | | |
| 131-013 | AIR COMPRESSOR DISCHARGE LINE | | |
| 152-041 | ELECTRONIC ENGINE INTEGRAL SHUTDOWN PROTECTION SYSTEM | | |
| 128-002 | JACOBS COMPRESSION BRAKE | | |
| 016-1C2 | RH OUTBOARD UNDER STEP MOUNTED HORIZONTAL AFTERTREATMENT SYSTEM ASSEMBLY WITH RH B-PILLAR MOUNTED VERTICAL TAILPIPE | | |

**Prepared for:**
Christina Kelly
NEBRASKA STATE OF
1526 K ST STE 130
LINCOLN, NE 68508
Phone: 402-471-2089

**Prepared by:**
Terry Novotny
Truck Center Companies
14321 CORNHUSKER RD
OMAHA, NE 68138
Phone:

| Data Code | Description | Weight Front | Weight Rear |
|---|---|---|---|
| 28F-002 | ENGINE AFTERTREATMENT DEVICE, AUTOMATIC OVER THE ROAD REGENERATION AND DASH MOUNTED REGENERATION REQUEST SWITCH | | |
| 239-038 | 11 FOOT 06 INCH (138 INCH+0/-5.9 INCH) EXHAUST SYSTEM HEIGHT | | |
| 233-017 | STANDARD CURVE BRIGHT UPPER STACK(S) | | |
| 237-1CR | RH CURVED VERTICAL TAILPIPE B-PILLAR MOUNTED ROUTED FROM STEP | | |
| 23U-002 | 13 GALLON DIESEL EXHAUST FLUID TANK | 35 | 10 |
| 30N-003 | 100 PERCENT DIESEL EXHAUST FLUID FILL | | |
| 23Y-001 | STANDARD DIESEL EXHAUST FLUID PUMP MOUNTING | | |
| 23Z-002 | NON-POLISHED ALUMINUM DIAMOND PLATE DIESEL EXHAUST FLUID TANK COVER | 20 | 10 |
| 43X-002 | LH MEDIUM DUTY STANDARD DIESEL EXHAUST FLUID TANK LOCATION | | |
| 242-001 | STAINLESS STEEL AFTERTREATMENT DEVICE/MUFFLER/TAILPIPE SHIELD | | |
| 273-036 | BORG WARNER (KYSOR) REAR AIR ON/OFF ENGINE FAN CLUTCH | | |
| 276-002 | AUTOMATIC FAN CONTROL WITH DASH SWITCH AND INDICATOR LIGHT, NON ENGINE MOUNTED | | |
| 110-068 | DDC SUPPLIED ENGINE MOUNTED FUEL FILTER/FUEL WATER SEPARATOR WITH WATER-IN-FUEL INDICATOR | | |
| 118-001 | FULL FLOW OIL FILTER | | |
| 266-057 | 1500 SQUARE INCH ALUMINUM RADIATOR | | |
| 267-006 | MOUNTING FOR FIREWALL MOUNTED SURGE TANK | | |
| 103-036 | ANTIFREEZE TO -34F, ETHYLENE GLYCOL PRE-CHARGED SCA HEAVY DUTY COOLANT | | |
| 171-007 | GATES BLUE STRIPE COOLANT HOSES OR EQUIVALENT | | |
| 172-001 | CONSTANT TENSION HOSE CLAMPS FOR COOLANT HOSES | | |
| 270-023 | HDEP FIXED RATIO COOLANT PUMP AND RADIATOR DRAIN VALVE | | |
| 168-003 | STEEL LOWER RADIATOR AND OIL PAN GUARDS | 85 | |
| 138-005 | PHILLIPS-TEMRO 1500 WATT/115 VOLT BLOCK HEATER | | |
| 166-998 | NO OIL PREHEATER | | |

**Prepared for:**
Christina Kelly
NEBRASKA STATE OF
1526 K ST STE 130
LINCOLN, NE 68508
Phone: 402-471-2089

**Prepared by:**
Terry Novotny
Truck Center Companies
14321 CORNHUSKER RD
OMAHA, NE 68138
Phone:

| Data Code | Description | Weight Front | Weight Rear |
|---|---|---|---|
| 140-022 | CHROME ENGINE HEATER RECEPTACLE MOUNTED UNDER LH DOOR | | |
| 134-001 | ALUMINUM FLYWHEEL HOUSING | | |
| 155-076 | DELCO 12V MOD 3.175-39MT+ STARTER WITH ENGINE ECU THERMAL PROTECTION AND INTEGRATED MAGNETIC SWITCH | -35 | |
| **Transmission** | | | |
| 342-415 | EATON FULLER FRO-14210C TRANSMISSION | | |
| **Transmission Equipment** | | | |
| 85P-998 | NO REAR PTO TRANSMISSION RANGE | | |
| 353-071 | BODY LIGHTING POWER WIRED TO CUSTOMER INTERFACE CONNECTOR WITH SEPARATE STOP/TURN | | |
| 347-002 | ALUMINUM CLUTCH HOUSING | -50 | |
| 362-802 | CUSTOMER INSTALLED CHELSEA 442 SERIES PTO | | |
| 363-009 | PTO MOUNTING, RH AND BOTTOM OF MAIN TRANSMISSION | | |
| 341-017 | MAGNETIC PLUGS, ENGINE DRAIN, TRANSMISSION FILL AND DRAIN, AXLE(S) FILL AND DRAIN | | |
| 345-001 | PAINTED SHIFT LEVER, SOLID LINKAGE | | |
| 370-015 | WATER TO OIL TRANSMISSION COOLER, IN RADIATOR END TANK | | |
| 35T-003 | SYNTHETIC TRANSMISSION LUBE | | |
| **Front Axle and Equipment** | | | |
| 400-099 | MFS-14-143A 14,700# FF1 71.5 INCH KPI/3.74 INCH DROP SINGLE FRONT AXLE | -130 | |
| 402-049 | MERITOR 16.5X5 Q+ CAST SPIDER CAM FRONT BRAKES, DOUBLE ANCHOR, FABRICATED SHOES | -10 | |
| 403-043 | 2011/2013-FMVSS 121 RSD FRONT BRAKE LINING | | |
| 419-023 | CONMET CAST IRON FRONT BRAKE DRUMS | | |
| 427-001 | FRONT BRAKE DUST SHIELDS | 5 | |
| 409-006 | FRONT OIL SEALS | | |
| 408-001 | VENTED FRONT HUB CAPS WITH WINDOW, CENTER AND SIDE PLUGS - OIL | | |
| 416-022 | STANDARD SPINDLE NUTS FOR ALL AXLES | | |
| 405-002 | MERITOR AUTOMATIC FRONT SLACK ADJUSTERS | | |
| 406-001 | STANDARD KING PIN BUSHINGS | | |

**Prepared for:**
Christina Kelly
NEBRASKA STATE OF
1526 K ST STE 130
LINCOLN, NE 68508
Phone: 402-471-2089

**Prepared by:**
Terry Novotny
Truck Center Companies
14321 CORNHUSKER RD
OMAHA, NE 68138
Phone:

| | Data Code | Description | Weight Front | Weight Rear |
|---|---|---|---|---|
| | 536-012 | TRW TAS-85 POWER STEERING | | |
| | 539-003 | POWER STEERING PUMP | | |
| | 534-015 | 2 QUART SEE THROUGH POWER STEERING RESERVOIR | | |
| | 40T-004 | GUARANTEED NAME BRAND "ROADRANGER SYNTHETIC" FE 75W-90 FRONT AXLE LUBE | | |
| **Front Suspension** | | | | |
| | 620-010 | 14,600# TAPERLEAF FRONT SUSPENSION | -100 | |
| | 619-005 | MAINTENANCE FREE RUBBER BUSHINGS - FRONT SUSPENSION | | |
| | 410-001 | FRONT SHOCK ABSORBERS | | |
| **Rear Axle and Equipment** | | | | |
| | 420-1K3 | MT-40-14X 40,000# R-SERIES TANDEM REAR AXLE | | 10 |
| | 421-390 | 3.90 REAR AXLE RATIO | | |
| | 424-003 | IRON REAR AXLE CARRIER WITH OPTIONAL HEAVY DUTY AXLE HOUSING | | |
| | 386-075 | MXL 18T MERITOR EXTENDED LUBE MAIN DRIVELINE WITH HALF ROUND YOKES | | |
| | 388-073 | MXL 17T MERITOR EXTENDED LUBE INTERAXLE DRIVELINE WITH HALF ROUND YOKES | | |
| | 452-006 | DRIVER CONTROLLED TRACTION DIFFERENTIAL - BOTH TANDEM REAR AXLES | | 30 |
| | 878-023 | (1) INTERAXLE LOCK VALVE, (1) DRIVER CONTROLLED DIFFERENTIAL LOCK FORWARD-REAR AND REAR-REAR AXLE VALVE | | |
| | 87A-005 | INDICATOR LIGHT FOR EACH INTERAXLE LOCKOUT SWITCH | | |
| | 87B-008 | INDICATOR LIGHT FOR EACH DRIVER CONTROLLED TRACTION DEVICE SWITCH | | |
| | 423-019 | MERITOR 16.5X8.62 Q+ CAST SPIDER CAM REAR BRAKES, DOUBLE ANCHOR, FABRICATED SHOES | | |
| | 433-043 | 2011/2013-FMVSS 121 RSD REAR BRAKE LININGS | | |
| | 434-003 | STANDARD BRAKE CHAMBER LOCATION | | |
| | 451-023 | CONMET CAST IRON REAR BRAKE DRUMS | | |
| * | 425-002 | REAR BRAKE DUST SHIELDS | | 10 |
| | | REFERENCE CHASSIS #'S MA2177 | | |
| | 440-006 | REAR OIL SEALS | | |
| | 426-101 | WABCO TRISTOP D LONGSTROKE 2-DRIVE AXLE SPRING PARKING CHAMBERS | | |
| | 428-003 | HALDEX AUTOMATIC REAR SLACK ADJUSTERS | | |

**Prepared for:**
Christina Kelly
NEBRASKA STATE OF
1526 K ST STE 130
LINCOLN, NE 68508
Phone: 402-471-2089

**Prepared by:**
Terry Novotny
Truck Center Companies
14321 CORNHUSKER RD
OMAHA, NE 68138
Phone:

| Data Code | Description | Weight Front | Weight Rear |
|---|---|---|---|
| 41T-001 | MINERAL SAE 80/90 REAR AXLE LUBE | | |
| **Rear Suspension** | | | |
| 622-1H2 | HENDRICKSON PRIMAAX EX 46,000# REAR AIR SUSPENSION | | 420 |
| 621-125 | HENDRICKSON PRIMAAX 10.00" RIDE HEIGHT | | |
| 431-003 | AXLE CLAMPING GROUP | | |
| 624-009 | 54 INCH AXLE SPACING | | |
| 888-047 | MANUAL DUMP VALVE FOR AIR SUSPENSION WITHOUT GAUGE | | |
| 87D-006 | INDICATOR LIGHT FOR EACH REAR SUSPENSION CONTROL SWITCH | | |
| 910-001 | SINGLE AIR REAR SUSPENSION LEVELING VALVE | | |
| 623-002 | TRANSVERSE CONTROL RODS | | |
| 439-005 | REAR SHOCK ABSORBERS - TWO AXLES (TANDEM) (AIR RIDE SUSPENSION) | | |
| **Brake System** | | | |
| 490-101 | WABCO 4S/4M ABS WITH TRACTION CONTROL, WITH ATC OFF-ROAD SWITCH | | |
| 871-001 | REINFORCED NYLON, FABRIC BRAID AND WIRE BRAID CHASSIS AIR LINES | | |
| 904-001 | FIBER BRAID PARKING BRAKE HOSE | | |
| 412-001 | STANDARD BRAKE SYSTEM VALVES | | |
| 432-003 | RELAY VALVE WITH 5-8 PSI CRACK PRESSURE, NO REAR PROPORTIONING VALVE | | |
| 480-086 | BW AD-9SI BRAKE LINE AIR DRYER WITH HEATER | | |
| 483-003 | BENDIX OIL COALESCING FILTER FOR AIR DRYER | | |
| 479-003 | AIR DRYER MOUNTED INBOARD ON LH RAIL | | |
| 460-090 | STEEL AIR BRAKE RESERVOIRS, NO TRIPLE OR TORPEDO TANKS | | |
| 477-004 | PULL CABLES ON ALL AIR RESERVOIR(S) | | |
| **Trailer Connections** | | | |
| 481-073 | 15 FOOT COILED TRAILER AIR HOSE WITH 12 INCH TRACTOR, 12 INCH TRAILER LEADS | 12 | |
| 476-046 | 49.5 INCH STAINLESS STEEL SLIDE BAR WITH SPRING TYPE AIR HOSE HANGER | 2 | |
| 484-006 | COMBINATION DUMMY GLAD HANDS AND LIGHT PLUG HOLDER | | |

**Prepared for:**
Christina Kelly
NEBRASKA STATE OF
1526 K ST STE 130
LINCOLN, NE 68508
Phone: 402-471-2089

**Prepared by:**
Terry Novotny
Truck Center Companies
14321 CORNHUSKER RD
OMAHA, NE 68138
Phone:

| Data Code | Description | Weight Front | Weight Rear |
|---|---|---|---|
| 296-010 | PRIMARY CONNECTOR/RECEPTACLE WIRED FOR SEPARATE STOP/TURN, ABS CENTER PIN POWERED THROUGH IGNITION | | |
| 297-132 | SAE J560 7-WAY PRIMARY TRAILER CABLE RECEPTACLE MOUNTED BACK OF CAB/BACK OF SLEEPER | | |
| 1AZ-001 | PAINTED STRADDLE BRACKET LOCATED AT BACK OF CAB/BACK OF SLEEPER | | |
| 310-082 | 12 FOOT DETACHABLE COILED PRIMARY TRAILER ELECTRICAL CABLE WITH SAE J560 CONNECTOR WITH 48 INCH TRACTOR, 12 INCH TRAILER LEADS | 12 | |
| **Wheelbase & Frame** | | | |
| 545-482 | 4825MM (190 INCH) WHEELBASE | | |
| 546-101 | 11/32X3-1/2X10-15/16 INCH STEEL FRAME (8.73MMX277.8MM/0.344X10.94 INCH) 120KSI | 190 | -80 |
| 552-003 | 1400MM (55 INCH) REAR FRAME OVERHANG | | |
| 55W-005 | FRAME OVERHANG RANGE: 51 INCH TO 60 INCH | 10 | -40 |
| AC8-99D | CALC'D BACK OF CAB TO REAR SUSP C/L (CA) : 126.65 in | | |
| AE8-99D | CALCULATED EFFECTIVE BACK OF CAB TO REAR SUSPENSION C/L (CA) : 122.65 in | | |
| AE4-99D | CALC'D FRAME LENGTH - OVERALL : 275.18 | | |
| ZF1-99D | FRAME HEIGHT TOP FRONT UNLADEN : 41.36 in | | |
| ZF2-99D | FRAME HEIGHT TOP FRONT LADEN : 39.2 in | | |
| ZF3-99D | FRAME HEIGHT TOP REAR UNLADEN : 42.14 in | | |
| ZF4-99D | FRAME HEIGHT TOP REAR LADEN : 40.74 in | | |
| FSS-0LH | CALCULATED FRAME SPACE LH SIDE : 29.61 in | | |
| FSS-0RH | CALCULATED FRAME SPACE RH SIDE : 11.95 in | | |
| AM6-99D | CALC'D SPACE AVAILABLE FOR DECKPLATE : 92.95 in | | |
| 553-002 | FLANGED TAPERED END OF FRAME | | |
| 559-001 | STANDARD WEIGHT ENGINE CROSSMEMBER | | |
| 561-001 | STANDARD CROSSMEMBER BACK OF TRANSMISSION | | |
| 562-001 | STANDARD MIDSHIP #1 CROSSMEMBER(S) | | |
| 572-020 | INVERTED U TRACTOR CROSSMEMBER | | 10 |
| 565-002 | HEAVY DUTY SUSPENSION CROSSMEMBER | | |
| 568-001 | STANDARD WEIGHT REAR SUSPENSION CROSSMEMBER | | |
| **Chassis Equipment** | | | |

**Prepared for:**
Christina Kelly
NEBRASKA STATE OF
1526 K ST STE 130
LINCOLN, NE 68508
Phone: 402-471-2089

**Prepared by:**
Terry Novotny
Truck Center Companies
14321 CORNHUSKER RD
OMAHA, NE 68138
Phone:

| | Data Code | Description | Weight Front | Weight Rear |
|---|---|---|---|---|
| | 674-021 | LH AND RH BACK OF CAB ACCESS, GRAB HANDLES WITH SINGLE RUBBER INSERT | 10 | 10 |
| | 592-053 | 14 INCH (350MM) DECK PLATE FLUSH MOUNTED BETWEEN RAILS | 5 | 5 |
| | 556-1E5 | 14 INCH PAINTED STEEL BUMPER | | |
| | 574-001 | BUMPER MOUNTING FOR SINGLE LICENSE PLATE | | |
| | 585-042 | BETTS B-25 PAINTED MUDFLAP BRACKETS | | 15 |
| | 590-032 | WESTERN STAR LOGO BLACK MUDFLAPS | | 15 |
| | 586-015 | FRONT ANTI-SPRAY CAB MOUNTED MUDFLAPS | | |
| | 551-007 | GRADE 8 THREADED HEX HEADED FRAME FASTENERS | | |
| | 44Z-002 | EXTERIOR HARNESSES WRAPPED IN ABRASION TAPE | | |
| | 583-059 | PLASTIC QUARTER FENDERS WITH LOGO | | 30 |
| **Fifth Wheel** | | | | |
| | 578-1JG | HOLLAND FW35 ILS 24.0 INCH AIR SLIDE FIFTH WHEEL - 2 INCH SLIDE INCREMENTS | 30 | 520 |
| | 577-457 | FIFTH WHEEL 457MM (18.0 INCHES) AHEAD OF SUSPENSION CENTERLINE | | |
| | 582-032 | 219MM (8.62 INCH) FIFTH WHEEL HEIGHT | | 5 |
| | 570-001 | OUTBOARD ANGLE - FIFTH WHEEL MOUNTING | | |
| | 890-002 | FIFTH WHEEL PLUMBING WITH AIR SLIDER INDICATOR LIGHT AND CONTROL ON DASH | | |
| | 87E-003 | INDICATOR LIGHT FOR EACH MODE SWITCH | | |
| * | 579-006 | RH FIFTH WHEEL RELEASE | | |
| **Fuel Tanks** | | | | |
| | 206-154 | 80 GALLON/302 LITER ALUMINUM FUEL TANK - RH | 95 | 20 |
| | 204-154 | 80 GALLON/302 LITER ALUMINUM FUEL TANK - LH | 10 | |
| | 218-006 | 25 INCH DIAMETER FUEL TANK(S) | | |
| | 215-005 | PLAIN ALUMINUM/PAINTED STEEL FUEL/HYDRAULIC TANK(S) WITH PAINTED BANDS | | |
| | 212-014 | LH FUEL TANK MOUNTED FORWARD, RH FUEL TANK MOUNTED AFT | | |
| | 664-001 | PLAIN STEP FINISH | | |
| | 205-001 | FUEL TANK CAP(S) | | |
| | 122-1H1 | DETROIT FUEL/WATER SEPARATOR WITH BYPASS | 10 | |
| | 216-020 | EQUIFLO INBOARD FUEL SYSTEM | | |

**Prepared for:**
Christina Kelly
NEBRASKA STATE OF
1526 K ST STE 130
LINCOLN, NE 68508
Phone: 402-471-2089

**Prepared by:**
Terry Novotny
Truck Center Companies
14321 CORNHUSKER RD
OMAHA, NE 68138
Phone:

| | Data Code | Description | Weight Front | Weight Rear |
|---|---|---|---|---|
| | 202-016 | HIGH TEMPERATURE REINFORCED NYLON FUEL LINE | | |
| **Tires** | | | | |
| | 093-994 | MICHELIN XZE 12R22.5 16 PLY RADIAL FRONT TIRES | 50 | |
| | 094-2F6 | CONTINENTAL HDR2 11R22.5 14 PLY RADIAL REAR TIRES | | 184 |
| * | 510-994 | MICHELIN XZE 12R22.5 16 PLY RADIAL SPARE TIRE | | 128 |
| **Hubs** | | | | |
| | 418-060 | CONMET PRESET PLUS PREMIUM IRON FRONT HUBS | | |
| | 450-060 | CONMET PRESET PLUS PREMIUM IRON REAR HUBS | | |
| **Wheels** | | | | |
| | 502-428 | ACCURIDE 28828 22.5X8.25 10-HUB PILOT 6.18 INSET 2-HAND HD STEEL DISC FRONT WHEELS | 26 | |
| | 505-428 | ACCURIDE 28828 22.5X8.25 10-HUB PILOT 2-HAND HD STEEL DISC REAR WHEELS | | 104 |
| | 50T-998 | NO FRONT AXLE WHEEL/HUB COVER | | |
| * | 511-428 | ACCURIDE 28828 22.5X8.25 10-HUB PILOT 2-HAND HD STEEL DISC SPARE WHEEL | 1 | 83 |
| | 496-011 | FRONT WHEEL MOUNTING NUTS | | |
| | 497-011 | REAR WHEEL MOUNTING NUTS | | |
| **Cab Exterior** | | | | |
| | 829-1A8 | 110 INCH BBC STEEL CONVENTIONAL CAB | | |
| | 82A-023 | WESTERN STAR PAINTED ALUMINUM CAB SKIRT | | |
| | 650-044 | AIR CAB MOUNTS WITH CHECK VALVE | | |
| | 705-059 | RACEWAY WITHOUT MISCELLANEOUS CUSTOM CAB REQUIREMENTS | | |
| | 648-002 | NONREMOVABLE BUGSCREEN MOUNTED BEHIND GRILLE | | |
| | 667-001 | FRONT FENDERS | | |
| * | 754-019 | OMIT FENDER EXTENSIONS. CUSTOMER ACCEPTS RESPONSIBILITY FOR OVER-WIDTH FRONT TIRES AND ANY TIRE TREAD PROTRUSION. | | |
| | 678-061 | LH AND RH EXTENDED EXTERIOR GRAB HANDLES WITH RUBBER INSERTS AND LH AND RH INTERIOR GRAB HANDLES MOUNTED TO A POST | | |
| | 646-008 | STATIONARY BRIGHT FINISH GRILLE | | |

**Prepared for:**
Christina Kelly
NEBRASKA STATE OF
1526 K ST STE 130
LINCOLN, NE 68508
Phone: 402-471-2089

**Prepared by:**
Terry Novotny
Truck Center Companies
14321 CORNHUSKER RD
OMAHA, NE 68138
Phone:

| Data Code | Description | Weight Front | Weight Rear |
|---|---|---|---|
| 65X-003 | CHROME HOOD MOUNTED AIR INTAKE GRILLE | | |
| 640-008 | GALVANEALED STEEL SEVERE SERVICE CAB | | |
| 644-004 | FIBERGLASS HOOD | | |
| 690-002 | TUNNEL/FIREWALL LINER | | |
| 727-096 | DUAL ROUND AIR HORNS, SINGLE BASE, MOUNTED UNDER CAB | | |
| 726-001 | SINGLE ELECTRIC HORN | | |
| 657-1AF | DOORS AND IGNITION KEYED THE SAME (3 KEYS) | | |
| 575-001 | REAR LICENSE PLATE MOUNT END OF FRAME | | |
| 312-031 | SINGLE RECTANGULAR H4 HALOGEN HEADLIGHTS WITH BRIGHT BEZELS | | |
| 302-022 | LED MARKER LAMPS | | |
| 294-1AX | INDIVIDUAL LED STOP/TURN/BACKUP LIGHTS GROMMET MOUNTED OUTBOARD OF RAIL | | 5 |
| 300-015 | STANDARD FRONT TURN SIGNAL LAMPS | | |
| 744-1E0 | DUAL WEST COAST STAINLESS STEEL HEATED MIRRORS WITH LH AND RH REMOTE | | |
| 797-001 | DOOR MOUNTED MIRRORS | | |
| 796-001 | 102 INCH EQUIPMENT WIDTH | | |
| 743-1AC | LH AND RH 8 INCH STAINLESS STEEL CONVEX MIRRORS MOUNTED BELOW PRIMARY MIRRORS | | |
| 74A-998 | NO AUXILIARY MIRROR | | |
| 729-001 | STANDARD SIDE/REAR REFLECTORS | | |
| 73A-002 | REAR REFLECTIVE DEVICE | | |
| 677-054 | RH AFTERTREATMENT SYSTEM CAB ACCESS WITH PLAIN DIAMOND PLATE COVER | | |
| 768-050 | 17.5X35 INCH LAMINATED SAFETY GLASS TINTED REAR WINDOW | 10 | |
| 661-006 | TINTED DOOR GLASS | | |
| 654-011 | RH AND LH ELECTRIC POWERED WINDOWS | 4 | |
| 663-002 | 2-PIECE ROPED-IN WINDSHIELD GASKET MOUNTED | | |
| 659-026 | 2 GALLON WINDSHIELD WASHER RESERVOIR WITH FLUID LEVEL INDICATOR, MOUNTED UNDER CAB, WITH REMOTE FILL | | |
| **Cab Interior** | | | |
| 707-1D4 | SMOKY MOUNTAIN GRAY VINYL PREMIUM INTERIOR | | |
| 70K-005 | BLACK HARD TRIM | | |
| 706-049 | BASE LEFT HAND DOOR TRIM | | |

**Prepared for:**
Christina Kelly
NEBRASKA STATE OF
1526 K ST STE 130
LINCOLN, NE 68508
Phone: 402-471-2089

**Prepared by:**
Terry Novotny
Truck Center Companies
14321 CORNHUSKER RD
OMAHA, NE 68138
Phone:

| | Data Code | Description | Weight Front | Weight Rear |
|---|---|---|---|---|
| | 708-049 | BASE RIGHT HAND DOOR TRIM | | |
| | 772-007 | BLACK MATS WITH DOUBLE INSULATION | | |
| | 785-024 | ASH CUP AND (1) POWER OUTLET | | |
| | 691-001 | FORWARD ROOF MOUNTED CONSOLE | | |
| | 697-012 | 14"X7.75" DOCUMENT POUCH MOUNTED ON BACK WALL BETWEEN SEATS | | |
| | 693-025 | LH AND RH DOOR MAP POCKETS | | |
| | 741-015 | (2) COAT HOOKS ON BACKWALL OF CAB | | |
| | 742-032 | (1) DOUBLE CUP HOLDER WITH CELL PHONE HOLDER LH OR RH DASH | | |
| | 680-034 | TWO-TONE CHARCOAL UPPER/COOL GRAY LOWER SOFT TOUCH WING DASH WITH BLACK DRIVER SIDE COSMETIC UNDER DASH COVER | | |
| | 700-023 | HEATER, DEFROSTER AND AIR CONDITIONER WITH CONSTANT TEMPERATURE CONTROL AND COSMETIC COVER | | |
| | 701-016 | HVAC DUCTING WITH FOAM MAIN FRESH AIR FILTER | | |
| | 703-005 | MAIN HVAC CONTROLS WITH RECIRCULATION SWITCH | | |
| | 170-045 | STANDARD HEATER PLUMBING WITH BALL SHUTOFF VALVES AT SUPPLY LINES ONLY | | |
| | 130-041 | VALEO HEAVY DUTY A/C REFRIGERANT COMPRESSOR | | |
| | 698-001 | RADIATOR MOUNTED AIR CONDITIONER CONDENSER | | |
| | 702-002 | BINARY CONTROL, R-134A | | |
| | 739-002 | ADDITIONAL CAB SIDEWALL INSULATION | 60 | 10 |
| | 285-033 | AUTOMATIC SELF-RESET CIRCUIT BREAKERS/FUSES IN DASH POWER DISTRIBUTION BOXES AND FUSES IN AUXILIARY POWER DISTRIBUTION BOXES | | |
| | 324-075 | DOOR ACTIVATED DOME LIGHT, UNDER DASH LIGHT AND LH AND RH DOOR MOUNTED COURTESY LIGHTS | | |
| | 655-001 | CAB DOOR LATCHES WITH MANUAL DOOR LOCKS | | |
| | 284-110 | (1) 12 VOLT POWER SUPPLY AND (2) USB PORTS MOUNTED IN DASH | | |
| * | 756-171 | NATIONAL 2000 SERIES HIGH BACK AIR SUSPENSION DRIVER SEAT WITH ACTIVE AIR LUMBAR SUPPORT | | |
| * | 760-171 | NATIONAL 2000 SERIES HIGH BACK AIR SUSPENSION PASSENGER SEAT WITH ACTIVE AIR LUMBAR SUPPORT | | |

**Prepared for:**
Christina Kelly
NEBRASKA STATE OF
1526 K ST STE 130
LINCOLN, NE 68508
Phone: 402-471-2089

**Prepared by:**
Terry Novotny
Truck Center Companies
14321 CORNHUSKER RD
OMAHA, NE 68138
Phone:

| Data Code | Description | Weight Front | Weight Rear |
|---|---|---|---|
| 758-014 | BLACK CORDURA PLUS CLOTH DRIVER SEAT COVER | | |
| 761-023 | BLACK MORDURA CLOTH PASSENGER SEAT COVER | | |
| 763-003 | 3 POINT DRIVER AND PASSENGER SEAT BELT RETRACTORS | | |
| 532-002 | ADJUSTABLE TILT AND TELESCOPING STEERING COLUMN | | |
| 540-044 | 4-SPOKE 18 INCH (450MM) BLACK STEERING WHEEL WITH SWITCHES | | |
| 765-002 | DRIVER AND PASSENGER INTERIOR SUN VISORS | | |
| **Instruments & Controls** | | | |
| 185-002 | NON-ADJUSTABLE SUSPENDED PEDALS | | |
| 106-002 | ELECTRONIC FOOT ACCELERATOR | | |
| 87L-001 | ENGINE REMOTE INTERFACE WITH PARK BRAKE INTERLOCK | | |
| 870-002 | BRIGHT ARGENT FINISH GAUGE BEZELS | | |
| 732-054 | BLACK VINYL DRIVER INSTRUMENT PANEL WITH CUSTOMER SPECIFIED CUSTOM SWITCH AND GAUGE LAYOUT | | |
| 734-021 | BLACK VINYL CENTER INSTRUMENT PANEL | | |
| 486-001 | LOW AIR PRESSURE INDICATOR LIGHT AND AUDIBLE ALARM | | |
| 840-002 | 2 INCH PRIMARY AND SECONDARY AIR PRESSURE GAUGES | | |
| 198-024 | FILTERMINDER DASH MOUNTED AIR RESTRICTION GAUGE | 2 | |
| 721-001 | 97 DB BACKUP ALARM | | 3 |
| 149-015 | ELECTRONIC CRUISE CONTROL WITH CONTROLS ON STEERING WHEEL SPOKES | | |
| 156-033 | KEY OPERATED IGNITION SWITCH AND INTEGRAL START POSITION; 4 POSITION OFF/RUN/START/ACCESSORY WITH ECM STARTER LOCKOUT | | |
| 811-041 | ICU4ME DRIVER MESSAGE CENTER WITH GRAPHICAL DISPLAY, BLACK FACE GAUGES, DIAGNOSTICS AND DATA LINKED | | |
| 160-039 | (1) HEAVY DUTY ONBOARD DIAGNOSTICS INTERFACE CONNECTOR LOCATED BELOW LH DASH AND (1) SAE J1939 DIAGNOSTIC INTERFACE CONNECTOR LOCATED CENTER OF DASH | | |
| 844-001 | 2 INCH ELECTRIC FUEL GAUGE | | |
| 845-011 | FUEL FILTER RESTRICTION INDICATOR | | |

**Prepared for:**
Christina Kelly
NEBRASKA STATE OF
1526 K ST STE 130
LINCOLN, NE 68508
Phone: 402-471-2089

**Prepared by:**
Terry Novotny
Truck Center Companies
14321 CORNHUSKER RD
OMAHA, NE 68138
Phone:

| | Data Code | Description | Weight Front | Weight Rear |
|---|---|---|---|---|
| | 148-070 | ENGINE REMOTE INTERFACE WITH PRESET FAST IDLE | | |
| * | 44Y-001 | CUSTOMER INTERFACE CONNECTOR LOCATED BETWEEN SEATS WITH CAPS | | |
| | 163-014 | ENGINE REMOTE INTERFACE CONNECTOR AT POWERTRAIN INTERFACE CONNECTOR | | |
| | 856-001 | ELECTRICAL ENGINE COOLANT TEMPERATURE GAUGE | | |
| | 864-001 | 2 INCH TRANSMISSION OIL TEMPERATURE GAUGE | | |
| | 867-004 | ELECTRONIC OUTSIDE TEMPERATURE SENSOR DISPLAY IN DRIVER MESSAGE CENTER | | |
| | 372-051 | CUSTOMER FURNISHED AND INSTALLED PTO CONTROLS | | |
| | 49B-004 | ELECTRONIC STABILITY CONTROL | | |
| | 852-002 | ELECTRIC ENGINE OIL PRESSURE GAUGE | | |
| | 746-114 | AM/FM/WB WORLD TUNER RADIO WITH AUXILIARY INPUT, J1939 | 10 | |
| | 747-002 | ROOF/OVERHEAD CONSOLE MOUNTED RADIO | | |
| | 750-004 | (4) RADIO SPEAKERS IN CAB | | |
| | 753-019 | AM/FM ANTENNA MOUNTED ON RH FRONT A-PILLAR | 2 | |
| | 748-026 | POWER AND GROUND WIRING FOR CB RADIO IN OVERHEAD CONSOLE | | |
| | 749-001 | ROOF/OVERHEAD CONSOLE CB RADIO PROVISION | | |
| | 752-017 | MULTI-BAND AM/FM/WB/CB LH MIRROR MOUNTED ANTENNA SYSTEM | | |
| | 75A-002 | UHF/VHF RADIO POWER/GROUND HARNESS TO OVERHEAD INSTRUMENT PANEL | | |
| * | 75B-105 | FORWARD CENTER ROOF MOUNTED ANTENNA-RADIO,UHF/VHF | | |
| | 810-042 | ELECTRONIC MPH SPEEDOMETER WITH SECONDARY KPH SCALE, WITH ODOMETER | | |
| | 817-001 | STANDARD VEHICLE SPEED SENSOR | | |
| | 812-001 | ELECTRONIC 3000 RPM TACHOMETER | | |
| | 813-998 | NO VEHICLE PERFORMANCE MONITOR | -5 | |
| | 6TS-010 | TELEMATICS PREWIRE WITH POWER, GROUND AND J1939 AT CUSTOMER INTERFACE CONNECTOR | | |
| | 162-020 | IDLE SHUTDOWN OVERRIDE, DDEC 5/6 AMBIENT AIR TEMPERATURE SENSOR | | |
| | 329-001 | ONE EXTRA SWITCH IN DASH | | |

**Prepared for:**
Christina Kelly
NEBRASKA STATE OF
1526 K ST STE 130
LINCOLN, NE 68508
Phone: 402-471-2089

**Prepared by:**
Terry Novotny
Truck Center Companies
14321 CORNHUSKER RD
OMAHA, NE 68138
Phone:

| | Data Code | Description | Weight Front | Weight Rear |
|---|---|---|---|---|
| | 4C1-002 | HARDWIRE SWITCH #1,ON/OFF LATCHING, 20 AMPS IGNITION WIRED TO CUSTOMER INTERFACE CONNECTOR | | |
| | 482-001 | BW TRACTOR PROTECTION VALVE | | |
| | 883-001 | TRAILER HAND CONTROL BRAKE VALVE | | |
| | 836-015 | DIGITAL VOLTAGE DISPLAY INTEGRAL WITH DRIVER DISPLAY | | |
| | 660-008 | SINGLE ELECTRIC WINDSHIELD WIPER MOTOR WITH DELAY | | |
| | 304-043 | CAB/TRAILER MARKER LIGHT SWITCH WITH SEPARATE HEADLIGHT SWITCH WITH HEADLIGHT/MARKER LIGHT INTERRUPTER SWITCHES ON STEERING WHEEL | | |
| | 882-004 | TWO VALVE PARKING BRAKE SYSTEM WITH WARNING INDICATOR | | |
| | 299-039 | SELF CANCELING TURN SIGNAL SWITCH, HEADLAMP HIGH/LOW AND FLASH, WASH/WIPE/INTERMITTENT | | |
| | 298-036 | PACIFIC INSIGHT ELECTRONIC FLASHER | | |
| **Design** | | | | |
| * | 065-000 | PAINT: ONE SOLID COLOR | | |
| **Color** | | | | |
| * | 980-45D | CAB COLOR A: HSB912048 BUTTERSCOTCH PPG BASE/CLEAR | | |
| | 96J-001 | CAB INTERIOR PAINTED SAME AS CAB COLOR | | |
| | 986-020 | BLACK, HIGH SOLIDS POLYURETHANE CHASSIS PAINT | | |
| | 962-972 | POWDER WHITE (N0006EA) FRONT WHEELS/RIMS (PKWHT21, TKWHT21, W, TW) | | |
| | 966-972 | POWDER WHITE (N0006EA) REAR WHEELS/RIMS (PKWHT21, TKWHT21, W, TW) | | |
| | 96F-972 | POWDER WHITE (N0006EA) SPARE WHEEL/RIM (PKWHT21, TKWHT21, W, TW) | | |
| | 964-993 | BUMPER PAINTED SAME AS CHASSIS | | |
| **Certification / Compliance** | | | | |
| | 996-001 | U.S. FMVSS CERTIFICATION, EXCEPT SALES CABS AND GLIDER KITS | | |
| **Secondary Factory Options** | | | | |
| | 95M-998 | NO CUSTOMER FURNISHED MATERIAL SPECIFIED | | |

**Prepared for:**
Christina Kelly
NEBRASKA STATE OF
1526 K ST STE 130
LINCOLN, NE 68508
Phone: 402-471-2089

**Prepared by:**
Terry Novotny
Truck Center Companies
14321 CORNHUSKER RD
OMAHA, NE 68138
Phone:

| Data Code | Description | Weight Front | Weight Rear |
|---|---|---|---|
| 999-014 | DEALER HAS BEEN ADVISED OF AND ACCEPTED RESPONSIBILITY FOR MODIFICATIONS DUE TO POSSIBLE PTO/CHASSIS INTERFERENCE | | |

## Raw Performance Data

| | |
|---|---|
| AE4-99D | CALC'D FRAME LENGTH - OVERALL : 275.18 |
| AE8-99D | CALCULATED EFFECTIVE BACK OF CAB TO REAR SUSPENSION C/L (CA) : 122.65 in |
| AM6-99D | CALC'D SPACE AVAILABLE FOR DECKPLATE : 92.95 in |

## T O T A L  V E H I C L E  S U M M A R Y

## Weight Summary

| | Weight Front | Weight Rear | Total Weight |
|---|---|---|---|
| Factory Weight[+] | 9596 lbs | 7997 lbs | 17593 lbs |
| Total Weight[+] | 9596 lbs | 7997 lbs | 17593 lbs |

(+) Weights shown are estimates only.
If weight is critical, contact Customer Application Engineering.

(***) All cost increases for major components (Engines, Transmissions, Axles, Front and Rear Tires) and government mandated requirements, tariffs, and raw material surcharges will be passed through and added to factory invoices.

**Prepared for:**
Christina Kelly
NEBRASKA STATE OF
1526 K ST STE 130
LINCOLN, NE 68508
Phone: 402-471-2089

**Prepared by:**
Terry Novotny
Truck Center Companies
14321 CORNHUSKER RD
OMAHA, NE 68138
Phone:

# QUOTATION

## 4700 SET-BACK FRONT AXLE CHASSIS

SET BACK AXLE - TRACTOR
DETROIT DD13 12.8L 435 HP @ 1625 RPM, 1900 GOV RPM, 1550 LB/FT @ 975 RPM
EATON FULLER FRO-14210C TRANSMISSION
MT-40-14X 40,000# R-SERIES TANDEM REAR AXLE
HENDRICKSON PRIMAAX EX 46,000# REAR AIR SUSPENSION
MFS-14-143A 14,700# FF1 71.5 INCH KPI/3.74 INCH DROP SINGLE FRONT AXLE
14,600# TAPERLEAF FRONT SUSPENSION
110 INCH BBC STEEL CONVENTIONAL CAB
4825MM (190 INCH) WHEELBASE
HOLLAND FW35 ILS 24.0 INCH AIR SLIDE FIFTH WHEEL - 2 INCH SLIDE INCREMENTS
11/32X3-1/2X10-15/16 INCH STEEL FRAME (8.73MMX277.8MM/0.344X10.94 INCH) 120KSI
1400MM (55 INCH) REAR FRAME OVERHANG

| | | | PER UNIT | | TOTAL |
|---|---|---|---|---|---|
| VEHICLE PRICE | **TOTAL # OF UNITS (2)** | $ | 96,881 | $ | 193,762 |
| EXTENDED WARRANTY | | $ | 0 | $ | 0 |
| DEALER INSTALLED OPTIONS | | $ | 0 | $ | 0 |
| **CUSTOMER PRICE BEFORE TAX** | | **$** | ***96,881*** | **$** | ***193,762*** |
| **TAXES AND FEES** | | | | | |
| FEDERAL EXCISE TAX (FET) | | $ | (305) | $ | (610) |
| TAXES AND FEES | | $ | 0 | $ | 0 |
| OTHER CHARGES | | $ | 0 | $ | 0 |
| **TRADE-IN** | | | | | |
| ***TRADE-IN ALLOWANCE*** | | $ | (0) | $ | (0) |
| **BALANCE DUE** | **(LOCAL CURRENCY)** | **$** | **96,576** | **$** | **193,152** |

COMMENTS:
Projected delivery on ___ / ___ / ___ provided the order is received before ___ / ___ / ___.

APPROVAL:
Please indicate your acceptance of this quotation by signing below:

Customer: X_____ Date: ___ / ___ / ___.

Daimler Truck Financial
Financing that works for you.

See your local dealer for a competitive quote from Daimler Truck Financial, or contact us at Information@dtfoffers.com.
Daimler Truck Financial offers a variety of finance, lease and insurance solutions to fit your business needs. For more information about our products and services, visit our website at www.daimler-truckfinancial.com.

**Prepared for:**
Christina Kelly
NEBRASKA STATE OF
1526 K ST STE 130
LINCOLN, NE 68508
Phone: 402-471-2089

**Prepared by:**
Terry Novotny
Truck Center Companies
14321 CORNHUSKER RD
OMAHA, NE 68138
Phone:

# DIMENSIONS

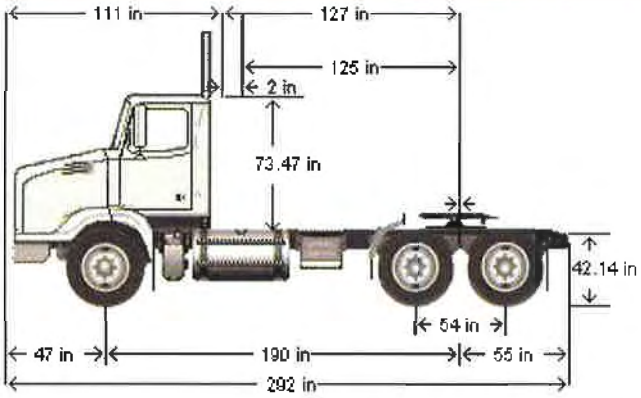


## VEHICLE SPECIFICATIONS SUMMARY - DIMENSIONS

Model ..... 4700SB
Wheelbase (545) ..... 4825MM (190 INCH) WHEELBASE
Rear Frame Overhang (552) ..... 1400MM (55 INCH) REAR FRAME OVERHANG
Fifth Wheel (578) ..... HOLLAND FW35 ILS 24.0 INCH AIR SLIDE FIFTH WHEEL - 2 INCH SLIDE INCREMENTS
- Mounting Location (577) ..... FIFTH WHEEL 457MM (18.0 INCHES) AHEAD OF SUSPENSION CENTERLINE
- Maximum Forward Position (in) ..... 18
- Maximum Rearward Position (in) ..... -6
- Amount of Slide Travel (in) ..... 24
- Slide Increment (in) ..... 2
- Desired Slide Position (in) ..... 0.0

Cab Size (829) ..... 110 INCH BBC STEEL CONVENTIONAL CAB
Sleeper (682) ..... NO SLEEPER BOX/SLEEPERCAB
Exhaust System (016) ..... RH OUTBOARD UNDER STEP MOUNTED HORIZONTAL AFTERTREATMENT SYSTEM ASSEMBLY WITH RH B-PILLAR MOUNTED VERTICAL TAILPIPE

## TABLE SUMMARY - DIMENSIONS

**Prepared for:**
Christina Kelly
NEBRASKA STATE OF
1526 K ST STE 130
LINCOLN, NE 68508
Phone: 402-471-2089

**Prepared by:**
Terry Novotny
Truck Center Companies
14321 CORNHUSKER RD
OMAHA, NE 68138
Phone:

| Dimensions | Inches |
|---|---|
| Bumper to Back of Cab (BBC) | 110.7 |
| Bumper to Centerline of Front Axle (BA) | 47.4 |
| Back of Cab to Centerline of Rear Axle(s) (CA) | 126.7 |
| Effective Back of Cab to Centerline of Rear Axle(s) (Effective CA) | 124.7 |
| Back of Cab Protrusions (Exhaust/Intake) (CP) | 2.0 |
| Back of Cab Protrusions (Side Extenders/Trim Tab) (CP) | 0.0 |
| Back of Cab Protrusions (CNG Tank) | 0.0 |
| Back of Cab Clearance (CL) | 2.0 |
| Back of Cab to End of Frame | 181.8 |
| Cab Height (CH) | 73.5 |
| Fifth Wheel to Centerline of Rear Axle(s) (FW) | 0.0 |
| Wheelbase (WB) | 190.0 |
| Frame Overhang (OH) | 55.1 |
| Overall Length (OAL) | 292.5 |
| Rear Axle Spacing | 54.0 |
| Unladen Frame Height at Centerline of Rear Axle | 42.1 |

Performance calculations are estimates only. If performance calculations are critical, please contact Customer Application Engineering.