State of Nebraska - INVITATION TO BID CONTRACT

Return to:
State Purchasing Bureau
1526 K Street, Suite 130
Lincoln, Nebraska 68508

Telephone: 402-471-6500
Fax: 402-471-2089

Date	11/28/17	**Page**	1 of 2
Solicitation Number	5724 OF		
Opening Date and Time	12/15/17	2:00 pm	
Buyer	DIANNA GILLILAND (AS)		

DESTINATION OF GOODS
MULTIPLE DELIVERY LOCATIONS PLEASE REFER TO DOCUMENTATION FOR DELIVERY ADDRESSES.

Per Nebraska' s Transparency in Government Procurement Act, DAS is required to collect statistical information regarding the number of contracts awarded to Nebraska contractors. This information is for statistical purposes only and will not be considered for contract award purposes.

_____NEBRASKA CONTRACTOR AFFADAVIT: Bidder hereby attests that bidder is a Nebraska Contractor. " Nebraska Contractor" shall mean any bidder who has maintained a bona fide place of business and at least one employee within this state for at least the six (6) months immediately preceding the posting date of this ITB.

_____ I hereby certify that I am a Resident disabled veteran or business located in a designated enterprise zone in accordance with Neb. Rev. Stat. §73-107 and wish to have preference, if applicable, considered in the award of this contract.

Contract to supply and deliver HYDRAULICALLY REVERSIBLE, TRIP EDGE, SNOW PLOW WITH ELEVEN FOOT STEEL MOLDBOARD to the State of Nebraska as per the attached specifications for a two (2) year period from date of award. The contract may be renewed for three (3) additional one (1) year periods when mutually agreeable to the vendor and the State of Nebraska.

(vc 11/27/17)

INVITATION

Line	Description	Quantity	Unit of Measure	Unit Price	Extended Price
1	**HYDRAULICALLY REVERSIBLE TRIP** EDGE 11 FOOT STEEL SNOW PLOW	10.0000	EA	$5,145.00	$51,450.00

MAKE: VALK

MODEL: TTE 113-82PR-J

BIDDER MUST COMPLETE THE FOLLOWING

DISCOUNT PAYMENT TERMS: 0 % 30 DAYS

By signing this Invitation to Bid form, the bidder guarantees compliance with the provisions stated in this Invitation to Bid, agrees to the terms and conditions unless otherwise agreed to (see Section III) and certifies that bidder maintains a drug free work place environment. Vendor will furnish the items requested within 60-120 days after receipt of order. Failure to enter Delivery Date may cause quotation to be REJECTED.

Sign Here John T Wartenbee
(Authorized Signature MANDATORY - MUST BE SIGNED IN INK)

VENDOR# 502992
VENDOR: NORTHERN TRUCK EQUIPMENT CORP.
Address: PO BOX 2435
SIOUX FALLS, SD 57101

Enter Contact Information Below

Contact JOHN WARTENBEE
Telephone 605-543-5206
Facsimile 605-543-5219
Email JWARTENBEE@NTECORP.COM

State of Nebraska - INVITATION TO BID CONTRACT

Return to:
State Purchasing Bureau
1526 K Street, Suite 130
Lincoln, Nebraska 68508

Telephone: 402-471-6500
Fax: 402-471-2089

Date	11/28/17	**Page**	2 of 2
Solicitation Number	5724 OF		
Opening Date and Time	12/15/17	2:00 pm	
Buyer	DIANNA GILLILAND (AS)		

DESTINATION OF GOODS
MULTIPLE DELIVERY LOCATIONS PLEASE REFER TO DOCUMENTATION FOR DELIVERY ADDRESSES.

INVITATION

Line	Description	Quantity	Unit of Measure	Unit Price	Extended Price
	OPTIONS				
2	**NON QUICK ATTACH HITCH** DEDUCT	5.0000	EA	$200.00	$1,000.00
3	**12 FOOT STEEL** MOLDBOARD PLOW	30.0000	EA	$5,250.00	$157,500.00

MAKE: VALK

MODEL: TTE123-82PR-5

INVITATION TO BID

Number 5724-OF

The State of Nebraska (State), Department of Administrative Services (DAS), Materiel Division, State Purchasing Bureau (SPB), is issuing this Invitation to Bid (ITB) for a commodity contract, ITB Number 5724 OF for the purpose of selecting a qualified Bidder to provide HYDRAULICALLY REVERSIBLE, TRIP EDGE, SNOW PLOW WITH ELEVEN FOOT STEEL MOLDBOARD. Specifications can be found in Section VI. The resulting contract may not be an exclusive contract as the State reserves the right to contract for the same or similar goods from other sources now or in the future.

https://statecontracts.nebraska.gov/

In addition and in furtherance of the State's public records statute (Neb. Rev. Stat. § 84-712 et seq.) all bids or responses received regarding this ITB will be posted to the SPB website.

These postings will include the entire bid or response. Bidders must request that proprietary information be excluded from the posting. The Bidder must identify the proprietary information, mark the proprietary information according to state law, and submit the proprietary information in a separate container or envelope marked conspicuously using an indelible method with the words "PROPRIETARY INFORMATION". The Bidder must submit a **detailed written document showing** that the release of the proprietary information would give a business advantage to named business competitor(s) and explain how the named business competitor(s) will gain an actual business advantage by disclosure of information. The mere assertion that information is proprietary or that a speculative business advantage might be gained is not sufficient. (See Attorney General Opinion No. 92068, April 27, 1992) **THE BIDDER MAY NOT ASSERT THAT THE ENTIRE BID OR RESPONSE IS PROPRIETARY. COST WILL NOT BE CONSIDERED PROPRIETARY AND IS A PUBLIC RECORD IN THE STATE OF NEBRASKA.** The State will then determine, in its discretion, if the interests served by nondisclosure outweighs any public purpose served by disclosure. (See Neb. Rev. Stat. § 84-712.05(3)) The Bidder will be notified of the agency's decision. Absent a State determination that information is proprietary, the State will consider all information a public record subject to release regardless of any assertion that the information is proprietary.

If the agency determines it is required to release proprietary information, the Bidder will be informed. It will be the Bidder's responsibility to defend the Bidder's asserted interest in non-disclosure.

To facilitate such public postings, with the exception of proprietary information, the State of Nebraska reserves a royalty-free, nonexclusive, and irrevocable right to copy, reproduce, publish, post to a website, or otherwise use any contract, bid, or response to this ITB for any purpose, and to authorize others to use the documents. Any individual or entity awarded a contract, or who submits a bid or response to this ITB, specifically waives any copyright or other protection the contract, bid, or response to the ITB may have; and, acknowledges that they have the ability and authority to enter into such waiver. This reservation and waiver is a prerequisite for submitting a bid or response to this ITB, and award of a contract. Failure to agree to the reservation and waiver will result in the bid or response to the ITB being found non-responsive and rejected.

Any entity awarded a contract or submitting a bid or response to the ITB agrees not to sue, file a claim, or make a demand of any kind, and will indemnify and hold harmless the State and its employees, volunteers, agents, and its elected and appointed officials from and against any and all claims, liens, demands, damages, liability, actions, causes of action, losses, judgments, costs, and expenses of every nature, including investigation costs and expenses, settlement costs, and attorney fees and expenses, sustained or asserted against the State, arising out of, resulting from, or attributable to the posting of the contract or the bids and responses to the ITB, awards, and other documents.

TABLE OF CONTENTS

INVITATION TO BID i

TABLE OF CONTENTS ii

GLOSSARY OF TERMS iv

I. PROCUREMENT PROCEDURE 8

A. GENERAL INFORMATION 8
B. PROCURING OFFICE AND COMMUNICATION WITH STATE STAFF AND EVALUATORS 8
C. COMMUNICATION WITH STATE STAFF 8
D. SCHEDULE OF EVENTS 8
E. WRITTEN QUESTIONS AND ANSWERS 9
F. RECYCLING (§ 81-15,159(d)(2)) 9
G. SECRETARY OF STATE/TAX COMMISSIONER REGISTRATION REQUIREMENTS (Statutory) 9
H. ETHICS IN PUBLIC CONTRACTING 9
I. SPECIFICATIONS 9
J. BID PREPARATION COSTS 10
K. DISCOUNTS 10
L. PRICES 10
M. DEVIATIONS FROM THE INVITATION TO BID 10
N. ALTERNATE/EQUIVALENT BIDS 10
O. LUMP SUM OR 'ALL OR NONE' BIDS 10
P. BID REQUIREMENTS 10
Q. FAILURE TO COMPLY WITH INVITATION TO BID 10
R. SUBMISSION OF BIDS 11
S. EMAIL SUBMISSIONS 11
T. BID CORRECTIONS 11
U. LATE BIDS 11
V. BID OPENING 11
W. BID TABULATIONS 11
X. BEST AND FINAL OFFER 11
Y. REFERENCE AND CREDIT CHECKS 11
Z. REJECTION OF BIDS 12
AA. RESIDENT BIDDER 12
BB. AWARD 12

II. TERMS AND CONDITIONS 13

A. GENERAL 13
B. NOTIFICATION 13
C. GOVERNING LAW 14
D. CHANGE ORDERS OR SUBSTITUTIONS 14
E. BREACH 15
F. NON-WAIVER OF BREACH 15
G. SEVERABILITY 15
H. INDEMNIFICATION 15
I. ATTORNEY'S FEES 16
J. ASSIGNMENT, SALE, OR MERGER 16
K. CONTRACTING WITH OTHER POLITICAL SUB-DIVISIONS OF THE STATE OR ANOTHER STATE 16
L. FORCE MAJEURE 17
M. CONFIDENTIALITY 17
N. EARLY TERMINATION 17
O. CONTRACT CLOSEOUT 18

III. CONTRACTOR DUTIES 19

A. INDEPENDENT CONTRACTOR / OBLIGATIONS 19
B. EMPLOYEE WORK ELIGIBILITY STATUS 19
C. COMPLIANCE WITH CIVIL RIGHTS LAWS AND EQUAL OPPORTUNITY EMPLOYMENT / NONDISCRIMINATION (Statutory) 20
D. COOPERATION WITH OTHER CONTRACTORS 20
E. PERMITS, REGULATIONS, LAWS 20
F. NOTICE OF POTENTIAL CONTRACTOR BREACH 21

G. ANTITRUST 21
H. CONFLICT OF INTEREST 21
I. ADVERTISING 21
J. DRUG POLICY 22

IV. PAYMENT 23

A. PROHIBITION AGAINST ADVANCE PAYMENT 23
B. TAXES 23
C. INVOICES 23
D. INSPECTION AND APPROVAL 23
E. PAYMENT (Statutory) 24
F. LATE PAYMENT (Statutory) 24
G. SUBJECT TO FUNDING / FUNDING OUT CLAUSE FOR LOSS OF APPROPRIATIONS (Statutory) 24
H. RIGHT TO AUDIT (Statutory) 24

V. SCOPE OF WORK 25

A. SCOPE 25
B. AMENDMENT 25
C. REVISIONS 25

VI. INVITATION TO BID - TECHNICAL SPECIFICATIONS 26

A. BIDDER INSTRUCTIONS 26
B. NON-COMPLIANCE STATEMENT 26
C. MOLDBOARD ASSEMBLY 26
D. HYDRAULICS 28
E. A-FRAME ASSEMBLY 28
F. QUICK HITCH ASSEMBLE 29
G. COLOR REQUIREMENTS 29
H. MANUALS 30
I. WARRANTY 30
J. GENERAL REQUIREMENTS 30
K. ATTACHMENT – NON QUICK ATTACH FOR HYDRAULICALLY REVERSIBLE SNOW PLOW 31
L. ANNAUL USAGE, ESTIMATED 31
M. USAGE REPORT 32
N. DELIVERY AFTER RECEIPT OF ORDER 32
O. DELIVERY LOCATION 32
P. PACKAGING 32
Q. ORDERS 33
R. QUALITY 33
S. PRICES 33
T. AUTHORIZED DEALER & WARRANTY 34
U. WARRANTY 34
V. SUBSTITUTIONS 34
W. SECRETARY OF STATE REGISTRATION REQUIREMENTS 35

Form A Bidder Contact Sheet 36

GLOSSARY OF TERMS

Acceptance Test Procedure: Benchmarks and other performance criteria, developed by the State or other sources of testing standards, for measuring the effectiveness of products or goods and the means used for testing such performance.

Addendum: Something to be added or deleted to an existing document; a supplement.

After Receipt of Order (ARO): After Receipt of Order

Agency: Any state agency, board, or commission other than the University of Nebraska, the Nebraska State colleges, the courts, the Legislature, or any other office or agency established by the Constitution of Nebraska.

Agent/Representative: A person authorized to act on behalf of another.

Amend: To alter or change by adding, subtracting, or substituting.

Amendment: A written correction or alteration to a document.

Appropriation: Legislative authorization to expend public funds for a specific purpose. Money set apart for a specific use.

Award: All purchases, leases, or contracts which are based on competitive bids will be awarded according to the provisions in the ITB. The State reserves the right to reject any or all bids, wholly or in part, or to award to multiple Bidders in whole or in part. The State reserves the right to waive any deviations or errors that are not material, do not invalidate the legitimacy of the bid, and do not improve the Bidder's competitive position. All awards will be made in a manner deemed in the best interest of the State.

Best and Final Offer (BAFO): In a competitive bid, the final offer submitted which contains the bidder's (vendor's) most favorable terms for price.

Bid/Proposal: The offer submitted by a vendor in a response to written solicitation.

Bid Bond: An insurance agreement, accompanied by a monetary commitment, by which a third party (the surety) accepts liability and guarantees that the vendor will not withdraw the bid.

Bidder: A vendor who submits an offer bid in response to a written solicitation.

Business: Any corporation, partnership, individual, sole proprietorship, joint-stock company, joint venture, or any other private legal entity.

Business Day: Any weekday, except State-recognized holidays.

Calendar Day: Every day shown on the calendar including Saturdays, Sundays, and State/Federal holidays.

Cancellation: To call off or revoke a purchase order without expectation of conducting or performing it at a later time.

Central Processing Unit (CPU): Any computer or computer system that is used by the State to store, process, or retrieve data or perform other functions using Operating Systems and applications software.

Change Order: Document that provides amendments to an executed purchase order.

Collusion: An agreement or cooperation between two or more persons or entities to accomplish a fraudulent, deceitful, or unlawful purpose.

Commodities: Any equipment, material, supply or goods; anything movable or tangible that is provided or sold.

Commodities Description: Detailed descriptions of the items to be purchased; may include information necessary to obtain the desired quality, type, color, size, shape, or special characteristics necessary to perform the work intended to produce the desired results.

Competition: The effort or action of two or more commercial interests to obtain the same business from third parties.

Confidential Information: Unless otherwise defined below, "Confidential Information" shall also mean proprietary trade secrets, academic and scientific research work which is in progress and unpublished, and other information which if released would give advantage to business competitors and serve no public purpose (see Neb. Rev. Stat. §84-712.05(3)). In accordance with Nebraska Attorney General Opinions 92068 and 97033, proof that information is proprietary requires identification of specific, named competitor(s) who would be advantaged by release of the information and the specific advantage the competitor(s) would receive.

Contract: An agreement between two or more parties creating obligations that are enforceable or otherwise recognizable at law; the

writing that sets forth such an agreement.

Contract Administration: The management of the contract which includes and is not limited to contract signing, contract amendments and any necessary legal actions.

Contract Management: The management of day to day activities at the agency which includes and is not limited to ensuring deliverables are received, specifications are met, handling meetings and making payments to the Contractor.

Contract Period: The duration of the contract.

Contractor: Any individual or entity having a contract or awarded purchase order to furnish commodities or goods.

Cooperative Purchasing: The combining of requirements of two or more political entities to obtain advantages of volume purchases, reduction in administrative expenses or other public benefits.

Copyright: A property right in an original work of authorship fixed in any tangible medium of expression, giving the holder the exclusive right to reproduce, adapt and distribute the work.

Critical Program Error: Any Program Error, whether or not known to the State, which prohibits or significantly impairs use of the Licensed Software as set forth in the documentation and intended in the contract.

Customer Service: The process of ensuring customer satisfaction by providing assistance and advice on those products or goods provided by a Contractor.

Default: The omission or failure to perform a contractual duty.

Deviation: Any proposed change(s) or alteration(s) to either the terms and conditions or deliverables within the scope of the written solicitation or contract.

Evaluation: The process of examining an offer after opening to determine the vendor's responsibility, responsiveness to requirements, and to ascertain other characteristics of the offer that relate to determination of the successful award.

Evaluation Committee: Committee(s) appointed by the requesting agency that advises and assists the procuring office in the evaluation of bids/s (offers made in response to written solicitations).

Extension: Continuance of a contract for a specified duration upon the agreement of the parties beyond the original Contract Period. Not to be confused with "Renewal Period".

Free on Board (F.O.B.) Destination: The delivery charges are included in the quoted price and prepaid by the vendor. Vendor is responsible for all claims associated with damages during delivery of product.

Free on Board (F.O.B.) Point of Origin: The delivery charges are not included in the quoted price and are the responsibility of the agency. Agency is responsible for all claims associated with damages during delivery of product.

Foreign Corporation: A foreign corporation that was organized and chartered under the laws of another state, government, or country.

Installation Date: The date when the procedures described in "Installation by Contractor", and "Installation by State", as found in the ITB, ITB (written solicitation) or contract are completed.

Invalid Bid: i.e., a fax or email response for a term contract.

Invitation to Bid (ITB): A written solicitation utilized for obtaining competitive offers.

Late Bid: An offer received after the Opening Date and Time.

Licensed Software Documentation: The user manuals and any other materials in any form or medium customarily provided by the Contractor to the users of the Licensed Software which will provide the State with sufficient information to operate, diagnose, and maintain the Licensed Software properly, safely, and efficiently.

Mandatory/Must: Required, compulsory, or obligatory.

May: Discretionary, permitted; used to express possibility.

Module (see System): A collection of routines and data structures that perform a specific function of software.

Must: See Shall/Will/Must.

National Institute for Governmental Purchasing (NIGP): National Institute of Governmental Purchasing – Source used for assignment of universal commodity codes to goods and goods.

Open Market Purchase: Authorization may be given to an agency to purchase items above direct purchase authority due to the unique nature, price, quantity, location of the using agency, or time limitations by the AS Materiel Division, State Purchasing Bureau.

Opening Date and Time: Specified date and time for the public opening of received, labeled, and sealed formal bids.

Operating System: The control program in a computer that provides the interface to the computer hardware and peripheral devices, and the usage and allocation of memory resources, processor resources, input/output resources, and security resources.

Outsourcing: The contracting out of a business process which an organization may have previously performed internally or has a new need for, to an independent organization from which the process is purchased back.

Payroll & Financial Center (PFC): Electronic procurement system of record.

Performance Bond: An insurance agreement, accompanied by a monetary commitment, by which a third party (the surety) accepts liability and guarantees that the Contractor fulfills any and all obligations under the contract.

Platform: A specific hardware and Operating System combination that is different from other hardware and Operating System combinations to the extent that a different version of the Licensed Software product is required to execute properly in the environment established by such hardware and Operating System combination.

Point of Contact (POC): The person designated to receive communications and to communicate

Pre-Bid/Pre-Proposal Conference: A meeting scheduled for the purpose of clarifying a written solicitation and related expectations.

Product: Something that is distributed commercially for use or consumption and that is usually (1) tangible personal property, (2) the result of fabrication or processing, and (3) an item that has passed through a chain of commercial distribution before ultimate use or consumption.

Program Error: Code in Licensed Software which produces unintended results or actions, or which produces results or actions other than those described in the specifications. A program error includes, without limitation, any Critical Program Error.

Program Set: The group of programs and products, including the Licensed Software specified in the ITB, plus any additional programs and products licensed by the State under the contract for use by the State.

Project: The total scheme, program, or method worked out for the accomplishment of an objective, including all documentation, commodities, and goods to be provided under the contract.

Proposal: See Bid.

Proprietary Information: Proprietary information is defined as trade secrets, academic and scientific research work which is in progress and unpublished, and other information which if released would give advantage to business competitors and service no public purpose (see Neb. Rev. Stat. § 84-712.05(3)). In accordance with Attorney General Opinions 92068 and 97033, proof that information is proprietary requires identification of specific named competitor(s) advantaged by release of the information and the demonstrated advantage the named competitor(s) would gain by the release of information.

Protest/Grievance: A complaint about a governmental action or decision related to an ITB or resultant contract, brought by a vendor who has timely submitted a bid response in connection with the award in question, to AS Materiel Division or another designated agency with the intention of achieving a remedial result.

Public Bid Opening: The process of opening correctly submitted offers at the time and place specified in the written solicitation and in the presence of anyone who wished to attend.

Recommended Hardware Configuration: The data processing hardware (including all terminals, auxiliary storage, communication, and other peripheral devices) to the extent utilized by the State as recommended by the Contractor.

Release Date: The date of public release of the written solicitation to seek offers

Renewal Period: Optional contract periods subsequent to the original Contract Period for a specified duration with previously agreed to terms and conditions. Not to be confused with Extension.

Request for Information (RFI): A general invitation to vendors requesting information for a potential future solicitation. The RFI is typically used as a research and information gathering tool for preparation of a solicitation.

Responsible Bidder: A Bidder who has the capability in all respects to perform fully and lawfully all requirements with integrity and

reliability to assure good faith performance.

Responsive Bidder: A Bidder who has submitted a bid which conforms to all requirements of the solicitation document.

Shall/Will/Must: An order/command; mandatory.

Should: Expected; suggested, but not necessarily mandatory.

Software License: Legal instrument with or without printed material that governs the use or redistribution of licensed software.

Sole Source – Commodity: When an item is available from only one source due to the unique nature of the requirement, its supplier, or market conditions.

Sole Source – Service: A service of such a unique nature that the vendor selected is clearly and justifiably the only practical source to provide the service. Determination that the vendor selected is justifiably the sole source is based on either the uniqueness of the service or sole availability at the location required.

Specifications: The detailed statement, especially of the measurements, quality, materials, and functional characteristics, or other items to be provided under a contract.

Statutory: These clauses are controlled by state law and are not subject to negotiation.

Subcontractor: Individual or entity with whom the contractor enters a contract to perform a portion of the work awarded to the contractor.

System (see Module): Any collection or aggregation of two (2) or more Modules that is designed to function, or is represented by the Contractor as functioning or being capable of functioning, as an entity.

Termination: Occurs when the contract expires or either party, pursuant to a power created by agreement or law puts an end to the contract prior to the stated expiration date. All obligations which are still executory on both sides are discharged but any right based on prior breach or performance survives.

Third-Party: Any person or entity, including but not limited to fiduciaries, shareholders, owners, officers, managers, employees, legally disinterested persons, and sub-contractors or agents, and their employees. It shall not include any entity or person who is an interested Party to the contract or agreement.

Trade Secret: Information, including, but not limited to, a drawing, formula, pattern, compilation, program, device, method, technique, code, or process that (a) derives independent economic value, actual or potential, from not being known to, and not being ascertainable by proper means by, other persons who can obtain economic value from its disclosure or use; and (b) is the subject of efforts that are reasonable under the circumstances to maintain its secrecy (see Neb. Rev. Stat. §87-502(4)).

Trademark: A word, phrase, logo, or other graphic symbol used by a manufacturer or vendor to distinguish its product from those of others, registered with the U.S. Patent and Trademark Office.

Upgrade: Any change that improves or alters the basic function of a product of service.

Vendor: An individual or entity lawfully conducting business in the State, or licensed to do so, who seeks to provide goods or goods under the terms of a written solicitation.

Vendor Performance Report: A report issued to the Contractor by SPB when products or goods delivered or performed fail to meet the terms of the purchase order, contract, and/or specifications, as reported to SPB by the agency. The SPB shall contact the Contractor regarding any such report. The vendor performance report will become a part of the permanent record for the Contractor. The State may require vendor to cure. Two such reports may be cause for immediate termination.

Will: See Shall/Will/Must.

Work Day: See Business Day.

I. PROCUREMENT PROCEDURE

A. GENERAL INFORMATION

The ITB is designed to solicit bids from qualified Bidders who will be responsible for providing HYDRAULICALLY REVERSIBLE, TRIP EDGE, SNOW PLOW WITH ELEVEN FOOT STEEL MOLDBOARD at a competitive and reasonable cost. A detailed description can be found in Section VI.

Bids shall conform to all instructions, conditions, and requirements included in the ITB. Prospective Bidders are expected to carefully examine all documents, schedules, and requirements in this ITB, and respond to each requirement in the format prescribed. Bids may be found non-responsive if they do not conform to the ITB.

B. PROCURING OFFICE AND COMMUNICATION WITH STATE STAFF AND EVALUATORS

Procurement responsibilities related to this ITB reside with the SPB. The point of contact (POC) for the procurement is as follows:

Name:	Dianna Gilliland
Agency:	State Purchasing Bureau
Address:	1526 K Street, Suite 130 Lincoln, NE 68508
Telephone:	402-471-6500
E-Mail:	as.materielpurchasing@nebraska.gov

C. COMMUNICATION WITH STATE STAFF

From the date the ITB is issued until the Intent to Award is issued communication from the Bidder is limited to communication with the State Purchasing Bureau (SPB). Only SPB is empowered to make binding statements regarding this ITB. SPB will issue any clarifications or opinions regarding this ITB in writing. Only SPB can modify the ITB, answer questions, render opinions, and only the SPB can award a contract. Bidders shall not have any communication with, or attempt to communicate or influence any evaluator involved in this ITB. After the intent to award is issued the Bidder may communicate with individuals the State has designated as responsible for negotiating the contract on behalf of the State.

The following exceptions to these restrictions are permitted:

1. Contact made pursuant to pre-existing contracts or obligations;
2. Contact required by the schedule of events or an event scheduled later by the SPB; and
3. Contact required for negotiation and execution of the final contract.

Violation of these conditions may be cause to reject a Bidder's bid and/or withdraw an Intent to Award, or terminate a contract if the State determines there has been a violation of these procurement procedures.

D. SCHEDULE OF EVENTS

The State expects to adhere to the procurement schedule shown below, but all dates are approximate and subject to change.

	ACTIVITY	DATE/TIME
1.	Release ITB	November 28, 2017
2.	Last day to submit written questions	December 6, 2017
3.	State responds to written questions through ITB "Addendum" and/or "Amendment" to be posted to the Internet at: http://das.nebraska.gov/materiel/purchasing.html	December 7, 2017
4.	Bid opening Location: State Purchasing Bureau 1526 K Street, Suite 130 Lincoln, NE 68508	December 15, 2017 2:00 PM Central Time
5.	Review for conformance of mandatory requirements	To Be Determined
6.	Evaluation period	To Be Determined
7.	Post "Letter of Intent to Contract" to Internet at: http://das.nebraska.gov/materiel/purchasing.html	To Be Determined
8.	Contract finalization period	To Be Determined
9.	Contract award	To Be Determined
10.	Contractor start date	To Be Determined

E. WRITTEN QUESTIONS AND ANSWERS

Questions regarding the meaning or interpretation of any ITB provision must be submitted in writing to the SPB and clearly marked "ITB Number 5724 OF; HYDRAULICALLY REVERSIBLE, TRIP EDGE, SNOW PLOW WITH ELEVEN FOOT STEEL MOLDBOARD Questions". SPB is not obligated to respond to questions that are received late per the Schedule of Events.

Bidders should present, as questions, any assumptions upon which the Bidder's bid is or might be developed. Bids will be evaluated without consideration of any known or unknown assumptions of a Bidder. The contract will not incorporate any known or unknown assumptions of a Bidder.

It is preferred that questions be sent via e-mail to as.materielpurchasing@nebraska.gov, but may be delivered by hand or by U.S. Mail. It is recommended that Bidders submit questions using the following format.

ITB Section Reference	ITB Page Number	Question

Written answers will be posted at http://das.nebraska.gov/materiel/purchasing.html per the Schedule of Events.

F. RECYCLING (§ 81-15,159(d)(2))

Preference will be given to items which are manufactured or produced from recycled material or which can be readily reused or recycled after their normal use. Preference will also be given to purchases of corn-based biodegradable plastics and road deicers if available and suitable. No preference shall be given if such preference would result in the purchase of products, materials, or supplies that are of inadequate quality or of substantially higher cost.

G. SECRETARY OF STATE/TAX COMMISSIONER REGISTRATION REQUIREMENTS (Statutory)

All Bidders must be authorized to transact business in the State and comply with all Nebraska Secretary of State Registration requirements. The Bidder who is the recipient of an Intent to Award will be required to certify that it has complied and produce a true and correct copy of its current (within ninety (90) calendar days of the intent to award) Certificate or Letter of Good Standing, or in the case of a sole proprietorship, provide written documentation of sole proprietorship and the United States Citizenship Attestation Form, available on the DAS website at http://das.nebraska.gov/materiel/purchasing.html. This must be accomplished prior to execution of the contract.

H. ETHICS IN PUBLIC CONTRACTING

The State reserves the right to reject bids, withdraw an intent to award or award, or terminate a contract if a Bidder commits or has committed ethical violations, which include, but are not limited to:

1. Offering or giving, directly or indirectly, a bribe, fee, commission, compensation, gift, gratuity, or anything of value to any person or entity in an attempt to influence the bidding process;
2. Utilize the services of lobbyists, attorneys, political activists, or consultants to influence or subvert the bidding process;
3. Being considered for, presently being, or becoming debarred, suspended, ineligible, or excluded from contracting with any state or federal entity:
4. Submitting a bid on behalf of another party or entity;
5. Collude with any person or entity to influence the bidding process, submit sham bids, preclude bidding, fix pricing or costs, create an unfair advantage, subvert the bid, or prejudice the State,

The Bidder shall include this clause in any subcontract entered into for the exclusive purpose of performing this contract.

Bidder shall have an affirmative duty to report any violations of this clause by the Bidder throughout the bidding process, and throughout the term of this contract for the successful Bidder and their subcontractors.

I. SPECIFICATIONS

Any manufacturer's names, trade names, brand names, information and/or catalog numbers listed in a specification are for reference and not intended to limit competition, but will be used as the standard by which equivalent material offered will be judged. The Materiel Administrator will be the sole judge of equivalency. The Bidder may offer any brands which meets or exceeds the specification. When a specific product is required, the ITB will so state. Any item bid is to be the latest current model under standard production at the time of order. No used or refurbished equipment will be accepted, unless otherwise stated.

J. BID PREPARATION COSTS

The State shall not incur any liability for any costs incurred by Bidders in replying to this ITB, including any activity related to bidding on this ITB.

K. DISCOUNTS

Prices quoted shall be inclusive of ALL trade discounts. Cash discount terms of less than thirty (30) days will not be considered as part of the bid. Cash discount periods will be computed from the date of receipt of a properly executed claim voucher or the date of completion of delivery of all items in a satisfactory condition, whichever is later.

L. PRICES

All prices, costs, and terms and conditions submitted in the proposal shall remain fixed and valid commencing on the opening date of the proposal until an award is made or the RFP is cancelled.

Prices submitted on the ITB shall remain fixed for the first one hundred and eighty days (180) of the contract. Increases will be cumulative across the remaining periods of the contract. Requests for an increase must be submitted in writing to the Nebraska State Purchasing Bureau a minimum of 60 days prior to the end of the current contract period. Documentation may be required by the State to support the price increase.

The State reserves the right to deny any requested price increase. No price increases are to be billed to any State Agencies prior to written amendment of the contract by the parties.

M. DEVIATIONS FROM THE INVITATION TO BID

The requirements contained in the ITB become a part of the terms and conditions of the contract resulting from this ITB. Any deviations from the ITB in Section VI must be clearly defined by the Bidder in its bid and, if accepted by the State, will become part of the contract. Any specifically defined deviations must not be in conflict with the basic nature of the ITB, mandatory requirements, or applicable state or federal laws or statutes. "Deviation", for the purposes of this ITB, means any proposed changes or alterations to either the contractual language or deliverables within the scope of this ITB. The State discourages deviations and reserves the right to reject proposed deviations.

N. ALTERNATE/EQUIVALENT BIDS

Bidder may offer bids which are at variance from the express specifications of the ITB. The State reserves the right to consider and accept such bids if, in the judgment of the Materiel Administrator, the bid will result in goods and/or services equivalent to or better than those which would be supplied in the original bid specifications. Bidders must indicate on the ITB the manufacturer's name, number and shall submit with their bid, sketches, descriptive literature and/or complete specifications. Reference to literature submitted with a previous bid will not satisfy this provision. Bids which do not comply with these requirements are subject to rejection. In the absence of any stated deviation or exception, the bid will be accepted as in strict compliance with all terms, conditions and specification, and the Bidder shall be held liable therefore.

O. LUMP SUM OR 'ALL OR NONE' BIDS

The State reserves the right to purchase item-by-item, by groups or as a total when the State may benefit by so doing. Bidders may submit a bid on an "all or none" or "lump sum" basis, but should also submit a bid on an item-by-item basis. The term "all or none" means a conditional bid which requires the purchase of all items on which bids are offered and Bidder declines to accept award on individual items; a "lump sum" bid is one in which the Bidder offers a lower price than the sum of the individual bids if all items are purchased, but agrees to deliver individual items at the prices quoted.

P. BID REQUIREMENTS

The bids will first be examined to determine if all requirements listed below have been addressed and whether further evaluation is warranted. Bids not meeting the requirements may be rejected as non-responsive. The requirements are:

1. Original Commodity ITB form signed using an indelible method (electronic signatures are not acceptable);
2. Clarity and responsiveness of the bid;
3. Completed Sections ITB;
4. Completed ITB Form or State's Bid Sheet.

Q. FAILURE TO COMPLY WITH INVITATION TO BID

Violation of the terms and conditions contained in this ITB or any resultant contract, at any time before or after the award, shall be grounds for action by the State which may include, but is not limited to, the following:

1. Rejection of a Bidder's bid;
2. Withdrawal of the Intent to Award;
3. Withdrawal of the Award;

4. Termination of the resulting contract;
5. Legal action; or,
6. Suspension of the Bidder from further bidding with the State for the period of time relative to the seriousness of the violation, such period to be within the sole discretion of the State.

R. SUBMISSION OF BIDS

ALL BIDS MUST BE SUBMITTED IN A SEALED ENVELOPE OR CONTAINER!

Only one (1) original bid shall be submitted. Each bid should be in a separate envelope or container. Bid responses should include the completed Form A, "Bidder Contact Sheet". Bids must reference the ITB number and be sent to the specified address. Please note that the address label should appear as specified in Section II, Part A on the face of each container or Bidder's bid response packet. If a recipient phone number is required for delivery purposes, 402-471-6500 should be used. The ITB number must be included in all correspondence.

Emphasis should be concentrated on conformance to the ITB instructions, responsiveness to requirements, completeness, and clarity of content. If the Bidder's bid is presented in such a fashion that makes evaluation difficult or overly time consuming the State reserves the right to reject the bid as non-conforming.

Sealed bids must be received in the State Purchasing Bureau by the date and time of the bid opening per the Schedule of Events. No late bids will be accepted.

It is the responsibility of the bidder to check the website for all information relevant to this solicitation to include addenda and/or amendments issued prior to the opening date. Website address is as follows: http://das.nebraska.gov/materiel/purchasing.html

By signing the "ITB" form, the Bidder guarantees compliance with the provisions stated in this ITB.

S. EMAIL SUBMISSIONS

The SPB will not accept bids by email except for one-time purchases under $50,000.00. .

T. BID CORRECTIONS

A bidder may correct a mistake in a bid prior to the time of opening by giving written notice to the State of intent to withdraw the bid for modification or to withdraw the bid completely. Changes in a bid after opening are acceptable only if the change is made to correct a minor error that does not affect price, quantity, quality, delivery, or contractual conditions. In case of a mathematical error in extension of price, unit price shall govern.

U. LATE BIDS

Bids received after the time and date of the bid opening will be considered late bids. Late bids will be returned unopened, if requested by the Bidder and at Bidder's expense. The State is not responsible for bids that are late or lost regardless of cause or fault.

V. BID OPENING

Anyone may attend the opening. It is considered a public opening. The Buyer will read the names of the respondents. Depending upon the complexity of the bid, the buyer may read the bids aloud or allow bids be available for viewing by the public during the bid opening. Once the bid opening has concluded, the bids will not be available for viewing until the Intent to Award has been posted. An initial bid tabulation will be posted to the website as soon as feasible. Information identified as proprietary by the submitting vendor, in accordance with the RFP/ITB and state statute, will not be posted. If the state determines submitted information should not be withheld, in accordance with the Public Records Act, or if ordered to release any withheld information, said information may then be released. The submitting bidder will be notified of the release and it shall be the obligation of the submitting bidder to take further action, if it believes the information should not be released.

W. BID TABULATIONS

Bid tabulations are available on the website at: http://www.das.state.ne.us/materiel/purchasing/bidtabs.htm.

X. BEST AND FINAL OFFER

The State reserves the right to request Best and Final Offers. However, a Bidder should provide its best offer in its original bid. Bidders should not expect that the State will request a best and final offer.

Y. REFERENCE AND CREDIT CHECKS

The State reserves the right to conduct and consider reference and credit checks. Reference or credit checks may be grounds to reject a bid, or withdraw an intent to award or award of a contract. The State reserves the right to use third parties to conduct reference and credit checks.

Z. REJECTION OF BIDS

The State reserves the right to reject any or all bids, wholly or in part, in the best interest of the State.

AA. RESIDENT BIDDER

Pursuant to Neb. Rev. Stat. §§ 73-101.01 through 73-101.02, a Resident Bidder shall be allowed a preference against a Non-resident Bidder from a state which gives or requires a preference to Bidders from that state. The preference shall be equal to the preference given or required by the state of the Nonresident Bidders. Where the lowest responsible bid from a resident Bidder is equal in all respects to one from a nonresident Bidder from a state which has no preference law, the resident Bidder shall be awarded the contract. The provision of this preference shall not apply to any contract for any project upon which federal funds would be withheld because of the provisions of this preference.

BB. AWARD

All purchases, leases, or contracts which are based on competitive bids will be awarded according to the provisions in the ITB. The State reserves the right to reject any or all bids, in whole or in part, or to award to multiple Bidders in whole or in part, and at its discretion, may withdraw or amend the ITB at any time. The State reserves the right to waive any deviations or errors that are not material, do not invalidate the legitimacy of the bid, and do not improve the Bidder's competitive position. All awards will be made in a manner deemed in the best interest of the State. The ITB does not commit the State to award a contract. If, in the opinion of the State, revisions or amendments will require substantive changes in bids, the bid opening date may be extended.

By submitting a bid in response to this ITB, the Bidder grants to the State the right to contact or arrange a visit in person with any or all of the Bidder's clients.

Once the Intent to Award decision has been made, an Intent to Award will be posted to the Internet at:
http://das.nebraska.gov/materiel/purchasing.html

The protest procedure is available on the Internet at:
http://das.nebraska.gov/materiel/purchase_bureau/docs/vendors/protest/ProtestGrievanceProcedureForVendors%20(2).pdf

Any protests must be filed by a vendor within ten (10) business days after the Intent to Award is posted to the Internet.

The State reserves the right to award contracts in a manner, and utilizing methods, selected in the State's best interest and discretion. The State may waive informalities or irregularities in bids if the waiver is in the best interest of the State and such waiver does not prejudice other Bidders in the State's discretion. After evaluation of the bids, the State may take, in the State's discretion, one or more of the following actions:

Accept or reject a portion of or all of a bid;
Accept or reject all bids;
Withdraw the ITB;
Elect to rebid the ITB;
Award single lines or multiple lines to one or more Bidders; or,
Award one or more complete contracts.

The State reserves the right to make awards that are in the best interest of the State. The State may consider, but is not limited to, one (1) or more of the following award criteria:

Price;
Location;
Quality;
Delivery time; and,
State contract management requirements and/or costs.

II. TERMS AND CONDITIONS

Bidder is expected to read the Terms and Conditions and must initial either accept, reject, or reject and provide alternative language for each clause. The Bidder should also provide an explanation of why the Bidder rejected the clause or rejected the clause and provided alternate language using 'Track Changes'. Upon request an electronic copy of the bid with 'Track Changes' must be submitted in an editable Word format. By signing the ITB Bidder is agreeing to be legally bound by all the accepted terms and conditions, and any proposed alternative terms and conditions submitted with the bid. The State reserves the right to negotiate rejected or proposed alternative language. If the State and Bidder fail to agree on the final Terms and Conditions, the State reserves the right to reject the bid. The State is soliciting bids in response to the ITB. The State reserves the right to reject bids that attempt to substitute the Bidder's commercial contracts and/or documents for this ITB.

The Bidder should submit with their bid any license, user agreement, service level agreement, or similar documents that the Bidder wants incorporated in the Contract. Upon notice of Intent to Award, the Bidder must submit a copy of these documents in an editable Word format. The State will not consider incorporation of any document not submitted with the Bidder's bid. These documents shall be subject to negotiation and will be incorporated as addendums if agreed to by the Parties.

If a conflict or ambiguity arises after the addendums have been negotiated and agreed to, the addendums shall be interpreted as follows:

1. If only one (1) Party's document has a particular clause then that clause shall control;
2. If both Party's documents have a similar clause, but the clauses do not conflict, the clauses shall be read together;
3. If both Party's documents have a similar clause, but the clauses conflict, the State's clause shall control.

A. GENERAL

Accept (Initial)	Reject (Initial)	Reject & Provide Alternative within ITB Response (Initial)	NOTES/COMMENTS:
JW			

The contract resulting from this ITB shall incorporate the following documents:

1. Invitation to Bid and Addenda;
2. Amendments to the ITB;
3. Questions and Answers;
4. Contractor's bid (ITB);
5. Award;
6. The executed Contract and any Addenda; and,
7. Amendments to the Contract

These documents constitute the entirety of the contract.

Unless otherwise specifically stated in a future contract amendment, in case of any conflict between the incorporated documents, the documents shall govern in the following order of preference with number one (1) receiving preference over all other documents and with each lower numbered document having preference over any higher numbered document: 1) Amendment to the executed Contract with the most recent dated amendment having the highest priority, 2) executed Contract and any attached Addenda, 3) Amendments to ITB and any Questions and Answers, 4) the original ITB document and any Addenda, and 5) the Contractor's submitted Bid.

Any ambiguity or conflict in the contract discovered after its execution, not otherwise addressed herein, shall be resolved in accordance with the rules of contract interpretation as established in the State.

B. NOTIFICATION

Accept (Initial)	Reject (Initial)	Reject & Provide Alternative within ITB Response (Initial)	NOTES/COMMENTS:
JW			

Contractor and State shall identify the contract manager who shall serve as the point of contact for the executed contract.

Communications regarding the executed contract shall be in writing and shall be deemed to have been given if delivered personally or mailed, by U.S. Mail, postage prepaid, return receipt requested, to the parties at their respective addresses set forth below, or at such other addresses as may be specified in writing by either of the parties. All notices, requests, or communications shall be deemed effective upon personal delivery or five (5) calendar days following deposit in the mail.

Either party may change its address for notification purposes by giving notice of the change, and setting forth the new address and an effective date.

C. GOVERNING LAW

Notwithstanding any other provision of this contract, or any amendment or addendum(s) entered into contemporaneously or at a later time, the parties understand and agree that, (1) the State of Nebraska is a sovereign state and its authority to contract is therefore subject to limitation by the State's Constitution, statutes, common law, and regulation; (2) this contract will be interpreted and enforced under the laws of the State of Nebraska; (3) any action to enforce the provisions of this agreement must be brought in the State of Nebraska per state law; (4) the person signing this contract on behalf of the State of Nebraska does not have the authority to waive the State's sovereign immunity, statutes, common law, or regulations; (5) the indemnity, limitation of liability, remedy, and other similar provisions of the final contract, if any, are entered into subject to the State's Constitution, statutes, common law, regulations, and sovereign immunity; and, (6) all terms and conditions of the final contract, including but not limited to the clauses concerning third-party use, licenses, warranties, limitations of liability, governing law and venue, usage verification, indemnity, liability, remedy or other similar provisions of the final contract are entered into specifically subject to the State's Constitution, statutes, common law, regulations, and sovereign immunity.

The Parties must comply with all applicable local, state and federal laws, ordinances, rules, orders, and regulations.

D. CHANGE ORDERS OR SUBSTITUTIONS

Accept (Initial)	Reject (Initial)	Reject & Provide Alternative within ITB Response (Initial)	NOTES/COMMENTS:
SW			

The State and the Contractor, upon the written agreement, may make changes to the contract within the general scope of the ITB. Changes may involve specifications, the quantity of work, or such other items as the State may find necessary or desirable. Corrections of any deliverable, service, or work required pursuant to the contract shall not be deemed a change. The Contractor may not claim forfeiture of the contract by reasons of such changes.

The State or Contractor may prepare a written description of the work required due to the change and the Contractor shall prepare an itemized cost sheet for the change. Changes in work and the amount of compensation to be paid to the Contractor shall be determined in accordance with applicable unit prices if any, a pro-rated value, or through negotiations. The State shall not incur a price increase for changes that should have been included in the Contractor's bid, were foreseeable, or result from difficulties with or failure of the Contractor's bid or performance.

No change shall be implemented by the Contractor until approved by the State, and the Contract is amended to reflect the change and associated costs, if any. If there is a dispute regarding the cost, but both parties agree that immediate implementation is necessary, the change may be implemented, and cost negotiations may continue with both Parties retaining all remedies under the contract and law.

Vendor will not substitute any item that has been awarded without prior written approval of SPB.

E. BREACH

Accept (Initial)	Reject (Initial)	Reject & Provide Alternative within ITB Response (Initial)	NOTES/COMMENTS:
JW			

Either Party may terminate the contract, in whole or in part, if the other Party breaches its duty to perform its obligations under the contract in a timely and proper manner. Termination requires written notice of default and a thirty (30) calendar day (or longer at the non-breaching Party's discretion considering the gravity and nature of the default) cure period. Said notice shall be delivered by Certified Mail, Return Receipt Requested, or in person with proof of delivery. Allowing time to cure a failure or breach of contract does not waive the right to immediately terminate the contract for the same or different contract breach which may occur at a different time.

In case of breach by the Contractor, the State may, without unreasonable delay, make a good faith effort to make a reasonable purchase or contract to purchased goods in substitution of those due from the contractor. The State may recover from the Contractor as damages the difference between the costs of covering the breach. Notwithstanding any clause to the contrary, the State may also recover the contract price together with any incidental or consequential damages defined in UCC Section 2-715, but less expenses saved in consequence of Contractor's breach.

The State's failure to make payment shall not be a breach, and the Contractor shall retain all available statutory remedies. (See Indemnity - Self-Insurance and Payment)

F. NON-WAIVER OF BREACH

Accept (Initial)	Reject (Initial)	Reject & Provide Alternative within ITB Response (Initial)	NOTES/COMMENTS:
JW			

The acceptance of late performance with or without objection or reservation by a Party shall not waive any rights of the Party nor constitute a waiver of the requirement of timely performance of any obligations remaining to be performed.

G. SEVERABILITY

Accept (Initial)	Reject (Initial)	Reject & Provide Alternative within ITB Response (Initial)	NOTES/COMMENTS:
JW			

If any term or condition of the contract is declared by a court of competent jurisdiction to be illegal or in conflict with any law, the validity of the remaining terms and conditions shall not be affected, and the rights and obligations of the parties shall be construed and enforced as if the contract did not contain the provision held to be invalid or illegal.

H. INDEMNIFICATION

Accept (Initial)	Reject (Initial)	Reject & Provide Alternative within ITB Response (Initial)	NOTES/COMMENTS:
JW			

1. **GENERAL**
The Contractor agrees to defend, indemnify, and hold harmless the State and its employees, volunteers, agents, and its elected and appointed officials ("the indemnified parties") from and against any and all claims, liens, demands, damages, liability, actions, causes of action, losses, judgments, costs, and expenses of every nature, including investigation costs and expenses, settlement costs, and attorney fees and expenses ("the claims"), sustained or asserted against the State for personal injury, death, or property loss or damage, arising out of, resulting from, or attributable to the willful misconduct, negligence, error, or omission of the Contractor, its employees, Subcontractors, consultants, representatives, and agents, resulting from this contract, except to the extent such Contractor liability is attenuated by any action of the State which directly and proximately contributed to the claims.

2. **SELF-INSURANCE (Statutory)**
The State is self-insured for any loss and purchases excess insurance coverage pursuant to Neb. Rev. Stat. § 81-8,239.01 (Reissue 2008). If there is a presumed loss under the provisions of this agreement, Contractor may file a claim with the Office of Risk Management pursuant to Neb. Rev. Stat. §81-8,829 through 81-8,306 for review by the State Claims Board. The State retains all rights and immunities under the State Miscellaneous (Section 81-8,294), Tort (Section 81-8,209), and Contract Claim Acts (Section 81-8,302), as outlined in Neb. Rev. Stat. § 81-8,209 et seq. and under any other provisions of law and accepts liability under this agreement to the extent provided by law.

I. ATTORNEY'S FEES

Accept (Initial)	Reject (Initial)	Reject & Provide Alternative within ITB Response (Initial)	NOTES/COMMENTS:
JW			

In the event of any litigation, appeal, or other legal action to enforce any provision of the contract, the Parties agree to pay all expenses of such action, as permitted by law and if order by the court, including attorney's fees and costs, if the other party prevails.

J. ASSIGNMENT, SALE, OR MERGER

Accept (Initial)	Reject (Initial)	Reject & Provide Alternative within ITB Response (Initial)	NOTES/COMMENTS:
JW			

Either party may assign the contract upon mutual written agreement of the other party. Such agreement shall not be unreasonably withheld.

The Contractor retains the right to enter into a sale, merger, acquisition, internal reorganization, or similar transaction involving Contractor's business. Contractor agrees to cooperate with the State in executing amendments to the contract to allow for the transaction. If a third party or entity is involved in the transaction, the Contractor will remain responsible for performance of the contract until such time as the person or entity involved in the transaction agrees in writing to be contractually bound by this contract and perform all obligations of the contract.

K. CONTRACTING WITH OTHER POLITICAL SUB-DIVISIONS OF THE STATE OR ANOTHER STATE

Accept (Initial)	Reject (Initial)	Reject & Provide Alternative within ITB Response (Initial)	NOTES/COMMENTS:
JW			

The Contractor may, but shall not be required to, allow agencies, as defined in Neb. Rev. Stat. §81-145, to use this contract. The terms and conditions, including price, of the contract may not be amended. The State shall not be contractually obligated or liable for any contract entered into pursuant to this clause.

The Contractor may, but shall not be required to, allow other states, agencies or divisions of other states, or political subdivisions of other states to use this contract. The terms and conditions, including price, of this contract shall apply to any such contract, but may be amended upon mutual consent of the Parties. The State of Nebraska shall not be contractually or otherwise obligated or liable under any contract entered into pursuant to this clause. The State shall be notified if a contract is executed based upon this contract.

L. FORCE MAJEURE

Accept (Initial)	Reject (Initial)	Reject & Provide Alternative within ITB Response (Initial)	NOTES/COMMENTS:
JW			

Neither party shall be liable for any costs or damages, or for default resulting from its inability to perform any of its obligations under the contract due to a natural or manmade event outside the control and not the fault of the affected party ("Force Majeure Event"). The Party so affected shall immediately make a written request for relief to the other party, and shall have the burden of proof to justify the request. The other Party may granted the relief requested; relief may not be unreasonably withheld. Labor disputes with the impacted party's own employees will not be considered a Force Majeure Event.

M. CONFIDENTIALITY

Accept (Initial)	Reject (Initial)	Reject & Provide Alternative within ITB Response (Initial)	NOTES/COMMENTS:
JW			

All materials and information provided by the Parties or acquired by a Party on behalf of the other Party shall be regarded as confidential information. All materials and information provided or acquired shall be handled in accordance with federal and state law, and ethical standards. Should said confidentiality be breached by a Party, the Party shall notify the other Party immediately of said breach and take immediate corrective action.

It is incumbent upon the Parties to inform their officers and employees of the penalties for improper disclosure imposed by the Privacy Act of 1974, 5 U.S.C. 552a. Specifically, 5 U.S.C. 552a (i)(1), which is made applicable by 5 U.S.C. 552a (m)(1), provides that any officer or employee, who by virtue of his/her employment or official position has possession of or access to agency records which contain individually identifiable information, the disclosure of which is prohibited by the Privacy Act or regulations established thereunder, and who knowing that disclosure of the specific material is prohibited, willfully discloses the material in any manner to any person or agency not entitled to receive it, shall be guilty of a misdemeanor and fined not more than $5,000.

N. EARLY TERMINATION

Accept (Initial)	Reject (Initial)	Reject & Provide Alternative within ITB Response (Initial)	NOTES/COMMENTS:
JW			

The contract may be terminated as follows:

1. The State and the Contractor, by mutual written agreement, may terminate the contract at any time.

2. The State, at its sole discretion, may terminate the contract for any reason upon thirty (30) calendar day's written notice to the Contractor. Such termination shall not relieve the Contractor of warranty or other service obligations incurred under the terms of the contract. In the event of termination the Contractor shall be entitled to payment, determined on a pro rata basis, for products or services satisfactorily performed or provided.

3. The State may terminate the contract immediately for the following reasons:

   a. if directed to do so by statute;
   b. Contractor has made an assignment for the benefit of creditors, has admitted in writing its inability to pay debts as they mature, or has ceased operating in the normal course of business;
   c. a trustee or receiver of the Contractor or of any substantial part of the Contractor's assets has been appointed by a court;
   d. fraud, misappropriation, embezzlement, malfeasance, misfeasance, or illegal conduct pertaining to performance under the contract by its Contractor, its employees, officers, directors, or shareholders;
   e. an involuntary proceeding has been commenced by any party against the Contractor under any one of the chapters of Title 11 of the United States Code and (i) the proceeding has been pending for at least sixty (60) calendar days; or (ii) the Contractor has consented, either expressly or by operation of law, to the entry of an order for relief; or (iii) the Contractor has been decreed or adjudged a debtor;
   f. a voluntary petition has been filed by the Contractor under any of the chapters of Title 11 of the United States Code;
   g. Contractor intentionally discloses confidential information;
   h. Contractor has or announces it will discontinue support of the deliverable; and,
   i. In the event funding is no longer available.

O. CONTRACT CLOSEOUT

Accept (Initial)	Reject (Initial)	Reject & Provide Alternative within ITB Response (Initial)	NOTES/COMMENTS:
JW			

Upon termination of the contract for any reason the Contractor shall within thirty (30) days, unless stated otherwise herein:

1. Transfer all completed or partially completed deliverables to the State;
2. Transfer ownership and title to all completed or partially completed deliverables to the State;
3. Return to the State all information and data, unless the Contractor is permitted to keep the information or data by contract or rule of law. Contractor may retain one copy of any information or data as required to comply with applicable work product documentation standards or as are automatically retained in the course of Contractor's routine back up procedures;
4. Cooperate with any successor contactor, person or entity in the assumption of any or all of the obligations of this contract;
5. Cooperate with any successor contactor, person or entity with the transfer of information or data related to this contract;
6. Return or vacate any state owned real or personal property;

Nothing in this Section should be construed to require the Contractor to surrender intellectual property, real or person property, or information or data owned by the Contractor for which the State has no legal claim.

III. CONTRACTOR DUTIES

A. INDEPENDENT CONTRACTOR / OBLIGATIONS

Accept (Initial)	Reject (Initial)	Reject & Provide Alternative within ITB Response (Initial)	NOTES/COMMENTS:
SW			

It is agreed that the Contractor is an independent contractor and that nothing contained herein is intended or should be construed as creating or establishing a relationship of employment, agency, or a partnership.

The Contractor is solely responsible for fulfilling the contract. The Contractor or the Contractor's representative shall be the sole point of contact regarding all contractual matters.

The Contractor shall secure, at its own expense, all personnel required to perform the services under the contract. The personnel the Contractor uses to fulfill the contract shall have no contractual or other legal relationship with the State; they shall not be considered employees of the State and shall not be entitled to any compensation, rights or benefits from the State, including but not limited to, tenure rights, medical and hospital care, sick and vacation leave, severance pay, or retirement benefits.

By-name personnel commitments made in the Contractor's bid shall not be changed without the prior written approval of the State. Replacement of these personnel, if approved by the State, shall be with personnel of equal or greater ability and qualifications.

The Contractor warrants that all persons assigned to the project shall be employees of the Contractor or a Subcontractor, and shall be fully qualified to perform the work required herein. Personnel employed by the Contractor or a subcontractor to fulfill the terms of the contract shall remain under the sole direction and control of the Contractor or the subcontractor respectively.

With respect to its employees, the Contractor agrees to be solely responsible for the following:

1. Any and all pay, benefits, and employment taxes and/or other payroll withholding;
2. Any and all vehicles used by the Contractor's employees, including all insurance required by state law;
3. Damages incurred by Contractor's employees within the scope of their duties under the contract;
4. Maintaining Workers' Compensation and health insurance that complies with state and federal law and submitting any reports on such insurance to the extent required by governing law;
5. Determining the hours to be worked and the duties to be performed by the Contractor's employees; and,
6. All claims on behalf of any person arising out of employment or alleged employment (including without limit claims of discrimination alleged against the Contractor, its officers, agents, or subcontractors or subcontractor's employees).

If the Contractor intends to utilize any subcontractor, the Subcontractor's level of effort, tasks, and time allocation must be clearly defined in the Contractor's bid. The Contractor shall agree that it will not utilize any Subcontractors not specifically included in its bid in the performance of the contract without the prior written authorization of the State.

The State reserves the right to require the Contractor to reassign or remove from the project any Contractor or Subcontractor employee.

Contractor shall insure that the terms and conditions contained in any contract with a sub-contractor does not conflict with the terms and conditions of this contract.

The Contractor shall include a similar provision, for the protection of the State, in the contract with any Subcontractor engaged to perform work on this contract.

B. EMPLOYEE WORK ELIGIBILITY STATUS

The Contractor is required and hereby agrees to use a federal immigration verification system to determine the work eligibility status of employees physically performing work within the State. A federal immigration verification system means the electronic verification of the work authorization program authorized by the Illegal Immigration Reform and

Immigrant Responsibility Act of 1996, 8 U.S.C. 1324a, known as the E-Verify Program, or an equivalent federal program designated by the United States Department of Homeland Security or other federal agency authorized to verify the work eligibility status of an employee.

If the Contractor is an individual or sole proprietorship, the following applies:

1. The Contractor must complete the United States Citizenship Attestation Form, available on the DAS website at http://das.nebraska.gov/materiel/purchasing.html

The completed United States Attestation Form should be submitted with the ITB response.

2. If the Contractor indicates on such attestation form that he or she is a qualified alien, the Contractor agrees to provide the U.S. Citizenship and Immigration Services documentation required to verify the Contractor's lawful presence in the United States using the Systematic Alien Verification for Entitlements (SAVE) Program.

3. The Contractor understands and agrees that lawful presence in the United States is required and the Contractor may be disqualified or the contract terminated if such lawful presence cannot be verified as required by Neb. Rev. Stat. § 4-108.

C. COMPLIANCE WITH CIVIL RIGHTS LAWS AND EQUAL OPPORTUNITY EMPLOYMENT / NONDISCRIMINATION (Statutory)

The Contractor shall comply with all applicable local, state, and federal statutes and regulations regarding civil rights laws and equal opportunity employment. The Nebraska Fair Employment Practice Act prohibits Contractors of the State, and their Subcontractors, from discriminating against any employee or applicant for employment, with respect to hire, tenure, terms, conditions, compensation, or privileges of employment because of race, color, religion, sex, disability, marital status, or national origin (Neb. Rev. Stat. §48-1101 through 48-1125). The Contractor guarantees compliance with the Nebraska Fair Employment Practice Act, and breach of this provision shall be regarded as a material breach of contract. The Contractor shall insert a similar provision in all Subcontracts for goods or services to be covered by any contract resulting from this ITB.

D. COOPERATION WITH OTHER CONTRACTORS

Accept (Initial)	Reject (Initial)	Reject & Provide Alternative within ITB Response (Initial)	NOTES/COMMENTS:
JW			

Contractor may be required to work with or in close proximity to other contractors or individuals that may be working on the same or different projects. The Contractor shall agree to cooperate with such other contractors or individuals, and shall not commit or permit any act which may interfere with the performance of work by any other contractor or individual. Contractor is not required to compromise Contractor's intellectual property or proprietary information unless expressly required to do so by this contract.

E. PERMITS, REGULATIONS, LAWS

Accept (Initial)	Reject (Initial)	Reject & Provide Alternative within ITB Response (Initial)	NOTES/COMMENTS:
JW			

The contract price shall include the cost of all royalties, licenses, permits, and approvals, whether arising from patents, trademarks, copyrights or otherwise, that are in any way involved in the contract. The Contractor shall obtain and pay for all royalties, licenses, and permits, and approvals necessary for the performance of the contract. The Contractor must guarantee that it has the full legal right to the materials, supplies, equipment, software, and other items used to execute this contract.

F. NOTICE OF POTENTIAL CONTRACTOR BREACH

Accept (Initial)	Reject (Initial)	Reject & Provide Alternative within ITB Response (Initial)	NOTES/COMMENTS:
JW			

If Contractor breaches the contract or anticipates breaching the contract the Contractor shall immediately give written notice to the State. The notice shall explain the breach or potential breach, and may include a request for a waiver of the breach if so desired. The State may, at its discretion, temporarily or permanently waive the breach. By granting a temporary waiver, the State does not forfeit any rights or remedies to which the State is entitled by law or equity, or pursuant to the provisions of the contract. Failure to give immediate notice, however, may be grounds for denial of any request for a waiver of a breach.

G. ANTITRUST

Accept (Initial)	Reject (Initial)	Reject & Provide Alternative within ITB Response (Initial)	NOTES/COMMENTS:
JW			

The Contractor hereby assigns to the State any and all claims for overcharges as to goods and/or services provided in connection with this contract resulting from antitrust violations which arise under antitrust laws of the United States and the antitrust laws of the State.

H. CONFLICT OF INTEREST

Accept (Initial)	Reject (Initial)	Reject & Provide Alternative within ITB Response (Initial)	NOTES/COMMENTS:
JW			

By submitting a bid, Contractor certifies that there does not now exist a relationship between the Contractor and any person or entity which is or gives the appearance of a conflict of interest related to this ITB or project.

The Contractor certifies that it shall not take any action or acquire any interest, either directly or indirectly, which will conflict in any manner or degree with the delivery of its goods hereunder or which creates an actual or an appearance of conflict of interest.

The Contractor certifies that it will not employ any individual known by Contractor to have a conflict of interest.

The Parties shall not knowingly, for a period of two years after execution of the contract, recruit or employ any employee or agent of the other Party who has worked on the ITB or project, or who had any influence on decisions affecting the ITB or project.

I. ADVERTISING

Accept (Initial)	Reject (Initial)	Reject & Provide Alternative within ITB Response (Initial)	NOTES/COMMENTS:
JW			

The Contractor agrees not to refer to the contract award in advertising in such a manner as to state or imply that the company or its goods are endorsed or preferred by the State. Any publicity releases pertaining to the project shall not be issued without prior written approval from the State.

J. DRUG POLICY

Accept (Initial)	Reject (Initial)	Reject & Provide Alternative within ITB Response (Initial)	NOTES/COMMENTS:
JW			

Contractor certifies it maintains a drug free work place environment to ensure worker safety and workplace integrity. Contractor agrees to provide a copy of its drug free workplace policy at any time upon request by the State.

IV. PAYMENT

A. PROHIBITION AGAINST ADVANCE PAYMENT

Accept (Initial)	Reject (Initial)	Reject & Provide Alternative within ITB Response (Initial)	NOTES/COMMENTS:
JW			

Neb. Rev. Stat. §§ 73-501 through 73-509 says "payments shall be made when contractual deliverables are received or in accordance with specific contractual terms and conditions." Standard term is to pay after deliverables and that any alteration of that standard term should be carefully considered and used only when absolutely necessary to accommodate certain critical exceptions, i.e. insurance premiums, etc. that must be paid in advance.)

Payments shall not be made until contractual deliverable(s) are received and accepted by the State.

B. TAXES

Accept (Initial)	Reject (Initial)	Reject & Provide Alternative within ITB Response (Initial)	NOTES/COMMENTS:
JW			

The State is not required to pay taxes and assumes no such liability as a result of this solicitation. The Contractor may request a copy of the Nebraska Department of Revenue, Nebraska Resale or Exempt Sale Certificate for Sales Tax Exemption, Form 13 for their records. Any property tax payable on the Contractor's equipment which may be installed in a state-owned facility is the responsibility of the Contractor.

C. INVOICES

Accept (Initial)	Reject (Initial)	Reject & Provide Alternative within ITB Response (Initial)	NOTES/COMMENTS:
JW			

Invoices for payments must be submitted by the Contractor to the agency requesting the services with sufficient detail to support payment. The terms and conditions included in the Contractor's invoice shall be deemed to be solely for the convenience of the parties. No terms or conditions of any such invoice shall be binding upon the State, and no action by the State, including without limitation the payment of any such invoice in whole or in part, shall be construed as binding or estopping the State with respect to any such term or condition, unless the invoice term or condition has been previously agreed to by the State as an amendment to the contract.

D. INSPECTION AND APPROVAL

Accept (Initial)	Reject (Initial)	Reject & Provide Alternative within ITB Response (Initial)	NOTES/COMMENTS:
JW			

Final inspection and approval of all work required under the contract shall be performed by the designated State officials.

If a simple inspection of the goods would reveal nonconformity, notice of nonconformity should be provided to the vendor as soon as reasonably practical, but not to exceed thirty (30) days from receipt of goods. This includes visual inspection of product to ensure packaging is not damaged, dented or compromised.

E. PAYMENT (Statutory)

State will render payment to Contractor when the terms and conditions of the contract and specifications have been satisfactorily completed on the part of the Contractor as solely determined by the State. (Neb. Rev. Stat. Section 73-506(1)). The State may require the Contractor to accept payment by electronic means such as ACH deposit. In no event shall the State be responsible or liable to pay for any services provided by the Contractor prior to the Effective Date of the contract, and the Contractor hereby waives any claim or cause of action for any such services.

F. LATE PAYMENT (Statutory)

The Contractor may charge the responsible agency interest for late payment in compliance with the State of Nebraska Prompt Payment Act (See Neb. Rev. Stat. §§ 81-2401 through 81-2408).

G. SUBJECT TO FUNDING / FUNDING OUT CLAUSE FOR LOSS OF APPROPRIATIONS (Statutory)

The State's obligation to pay amounts due on the Contract for a fiscal years following the current fiscal year is contingent upon legislative appropriation of funds. Should said funds not be appropriated, the State may terminate the contract with respect to those payments for the fiscal year(s) for which such funds are not appropriated. The State will give the Contractor written notice thirty (30) calendar days prior to the effective date of termination. All obligations of the State to make payments after the termination date will cease. The Contractor shall be entitled to receive just and equitable compensation for any authorized work which has been satisfactorily completed as of the termination date. In no event shall the Contractor be paid for a loss of anticipated profit.

H. RIGHT TO AUDIT (Statutory)

The State shall have the right to audit the Contractor's performance of this contract upon a thirty (30) day written notice. Contractor shall utilize generally accepted accounting principles, and shall maintain the accounting records, and other records and information relevant to the contract (Information) to enable the State to audit the contract. (Neb. Rev. Stat. §84-304 et seq.) The State may audit and the Contractor shall maintain the information during the term of the contract and for a period of five (5) years after the completion of this contract or until all issues or litigation are resolved, whichever is later. The Contractor shall make the Information available to the State at Contractor's place of business or a location acceptable to both Parties during normal business hours. If this is not practical or the Contractor so elects, the Contractor may provide electronic or paper copies of the Information. The State reserves the right to examine, make copies of, and take notes on any Information relevant to this contract, regardless of the form or the Information, how it is stored, or who possesses the Information. In no circumstances will contractor be required to create or maintain documents not kept in the ordinary course of contractor's business operations, nor will contractor be required to disclose any information, including but not limited to product cost data, which is confidential or proprietary to contractor.

The Parties shall pay their own costs of the audit unless the audit finds a previously undisclosed overpayment by the State. If a previously undisclosed overpayment exceeds three percent (3%) of the total contract billings, or if fraud, material misrepresentations, or non-performance is discovered on the part of the Contractor, the Contractor shall reimburse the State for the total costs of the audit. Overpayments and audit costs owed to the State shall be paid within ninety (90) days of written notice of the claim. The Contractor agrees to correct any material weaknesses or condition found as a result of the audit.

V. SCOPE OF WORK

The Bidder should provide the following information in response to this ITB.

A. SCOPE

It is the intent of this bid invitation to establish a contract to supply HYDRAULICALLY REVERSIBLE, TRIP EDGE, SNOW PLOW WITH ELEVEN FOOT STEEL MOLDBOARD per the attached specifications from date of award for a period of two (2) years with the option to renew for an additional three (3), one (1) year periods when mutually agreeable to the vendor and the State. The State reserves the right to extend the period of this contract beyond the end date when mutually agreeable to the vendor and the State.

All items bid shall be of the latest manufacture in production as of the date of the ITB and be of proven performance and under standard design complete as regularly advertised and marketed. All necessary materials for satisfactory performance of the supplies shall be incorporated into the HYDRAULICALLY REVERSIBLE, TRIP EDGE, SNOW PLOW WITH ELEVEN FOOT STEEL MOLDBOARD whether or not they may be specifically mentioned below.

Complete specifications, manufacturer's current descriptive literature and/or advertising data sheets with cuts or photographs must be included with the bid for the IDENTICAL items proposed. Any information necessary to show compliance with these specifications not given on the manufacturer's descriptive literature and/or advertising data sheets must be supplied in writing on or attached to the bid document. If manufacturer's information necessary to show compliance with these specifications is not attached to the bid document, the Bidder may be required to submit requested information within three (3) business days of a written request. Failure to submit requested descriptive literature or advertising data sheets may be grounds to reject the bid.

B. AMENDMENT

This Contract may be amended in writing, within scope, upon the agreement of both parties.

C. REVISIONS

In the event any product is discontinued or replaced upon mutual consent during the contract period, the State reserves the right to amend this contract to include the alternate product at the same price.

VI. INVITATION TO BID - TECHNICAL SPECIFICATIONS

A. BIDDER INSTRUCTIONS

Bidder must respond to each of the following statements. Specifications listed are minimum conditions that must be met in order for a Bidder to qualify for the award.

"YES" response means the Bidder guarantees they can meet this condition.

"NO" response means the Bidder cannot meet this condition and will not be considered.

"NO & PROVIDE ALTERNATIVE" responses should be used only with a narrative response in the NOTES/COMMENTS section explaining in detail any deviation from the Bidder's ability to meet the condition, and an explanation of how this would be determined to be an acceptable alternative to meeting the condition. Alternatives must be detailed in such a way that allows such deviations to be fully evaluated. The State shall determine at its sole discretion whether or not the Bidder's alternative is an acceptable alternative.

B. NON-COMPLIANCE STATEMENT

YES	NO	NO & PROVIDE ALTERNATIVE		
X			1.	Read these specifications carefully. Any and all exceptions to these specifications must be written on or attached to quotation request. Any noncompliance may void your quotation. Non-compliance to any single specification can void your quotation.
X			2.	It is the responsibility of Bidders to obtain information and clarifications as provided below. The State is not responsible for any erroneous or incomplete understandings or wrongful interpretations of this ITB by any Bidder.
X			3.	No interpretation related to the meaning of bid specifications or other pre-bid documents will be made orally to any Bidder by the State. Any ITB interpretation must be put in writing and faxed by the Bidder to: the State Purchasing Bureau, Fax (402) 471-2089 or e-mailed to AS Materiel Purchasing as.materielpurchasing@nebraska.gov by the last day to submit written questions that is specified in the Schedule of Events. (Inquiries received after the last day to submit written questions may not be addressed).
NOTES/COMMENTS:				

C. MOLDBOARD ASSEMBLY

YES	NO	NO & PROVIDE ALTERNATIVE		
X			1.	Overall width of eleven feet.
X			2.	Inverted "J" design per the drawing attached, Attachment 1.
X			3.	Thickness of moldboard of seven gauge or 3/16 inch sheet.
X			4.	Cutting edge of ½ inch by six inches by eleven feet and AASHTO punched.

X			**5.** Minimum cutting angle to right and left of 35 degrees.
X			**6.** Approximate weight of plow without hitch and lift to be 2,000 to 2,500 pounds.
X			**7.** One-piece trip edge with six adjustable torsion springs.
X			a. Springs shall be from not less than ¾ inch square wire, having a 3-3/4 inch O.D. with fifteen active coils each.
X			b. Each spring shall be pinned in place in a horizontal position and shall butt to the lower moldboard reinforcement and to the cutting edge reinforcement.
X			c. Spring adjustment shall be provided so as to alter the pre-charge of springs for varying plowing conditions.
X			d. Spring shaft shall be a solid rod.
X			**8.** Trip edge backing assembly shall be one continuous piece.
X			**9.** Moldboard shall be mounted on the reversing frame in such a manner so as to allow maximum blade wear without damage to bottom horizontal moldboard brace, blade attachment member and other components.
X			**10.** Manufacturer's continuous, integral design, solid snow shield (built-in-baffle) is required at the upper portion of the moldboard.
X			a. Moldboard top angle must be pre-punched for a rubber snow deflector prior to painting.
X			b. A rubber snow deflector will be furnished. It will consist of a 12 inch wide x 3/8 inch thick, 3-ply rubber belt, metal retaining strap and necessary mounting hardware.
X			c. The snow deflector will be mounted so that the rubber flap hangs vertically to the ground.
X			**11.** Moldboard will be hydraulically reversing type with dual hydraulic cylinders.
X			a. Minimum 3-1/2 inch cylinders with a 3 inch rod will be furnished.
X			b. The cylinder rod will be a hardened Nitride tensile steel.
X			**12.** Level lift system, regardless of rotational position of moldboard is required.
X			a. Plow must remain level to the road surface when reversed while in the raised position.
X			**13.** Moldboard must have ten ½ inch one piece steel reinforcing ribs.
X			**14.** Plow moldboard and vertical ribs shall be 100% welded. Stitch or skip welding will not be acceptable.

X			15.	All pivot points will have grease zerks or fittings.
NOTES/COMMENTS:				

D. HYDRAULICS

YES	NO	NO & PROVIDE ALTERNATIVE		
X			1.	Adequate length of ½ inch steel-braided hose, rated at 3,000 psi that reaches from reversing cylinders to front of chassis required.
X			2.	Hoses with ISO 16028 flat face interchange couplings meeting ISO 9227 standards to a minimum of 400 hours salt spray test. One male and one female coupler.
X			a.	Example of couplers: Faster FFH0812NPT/Faster FFH0812NPTM (FPQ Premier) Parker FEM-501-8FP-ZP/Parker FEM-502-8FP-ZJ (XTR) Stucchi Part #2317188/2317189 (Z plated).
X			3.	Hydraulic cushion valve shall be furnished. Cushion valve must be adjustable to protect the reversing cylinders and mechanism.
NOTES/COMMENTS:				

E. A-FRAME ASSEMBLY

YES	NO	NO & PROVIDE ALTERNATIVE		
X			1.	The A-Frame shall be a triangular weldment with 3/8-inch thick steel plates (top and bottom) a rear member from not less than 1 inch thick steel plate and two center reinforcements from not less than 3/8 inch thick steel plate, so to form a boxed center section.
X			a.	The height of the boxed center section shall be 5-3/4 inches.
X			2.	A truss frame shall include a main drive member from 4 inch square tubing with 3/8-inch wall.
X			3.	The truss frame shall pin to the moldboard at not less than 4 points over a span of not less than 82 inches and shall include two moldboard braces made from two inch square tubing with 1.-1/8 inch diameter attaching pins which allow for alternate moldboard positioning.
X			4.	Moldboard and truss frame shall pivot about the A-Frame on a lubricated pin, not less than 2-1/2 inches in diameter, up to 37 degrees either side of the chassis centerline. The pin shall be designed in such a way that it will be easily removed for maintenance.

NOTES/COMMENTS:

F. QUICK HITCH ASSEMBLE

YES	NO	NO & PROVIDE ALTERNATIVE		
X			1.	Be equipped with Universal Quick Attach system.
X			a.	Plow portion must be compatible to existing Monroe Universal Quick Attach system truck portion hitches.
X			2.	The snow plow push frame shall be designed with an automatic quick hitch type latching mechanism.
X			3.	The design of the latch mechanism shall allow the plow to swivel freely so that it can follow the contour of the road.
X			4.	The lock mechanisms must be welded 100% to the channel.
X			5.	The latching mechanisms shall be automatic, spring loaded, adjustable and single lever to release the two (2) steel latching mechanisms..
X			6.	The heavy duty latch mechanisms hold the plow portion of the hitch to the truck portion.
X			7.	The single locking lever shall be retained in either the lock or the released position.
X			8.	In the locked position the truck must be able to be driven into the hitch, have it self-align and lock automatically.
X			9.	The design of the quick hitch **MUST** incorporate a double lock. A single lock hitch is unacceptable.
X			10.	Lifting chains with miscellaneous hardware for attaching to top lifting arm must be provided.
X			11.	All pins for attaching push frame to moldboard must be made of stress proof steel.

NOTES/COMMENTS:

G. COLOR REQUIREMENTS

YES	NO	NO & PROVIDE ALTERNATIVE		
X			1.	Flat black enamel except for plowing surface.

X			2.	Plowing surface to be painted aluminum.
X			3.	All components must be painted prior to assembly to prevent unpainted areas of push frame.
NOTES/COMMENTS:				

H. MANUALS

YES	NO	NO & PROVIDE ALTERNATIVE		
X			1.	One operator's manual or instructions to be furnished and accompany each unit delivered.
X			2.	All manuals must be furnished prior to payment and delivered to Fleet Management, Equipment Data Coordinator.
NOTES/COMMENTS:				

I. WARRANTY

YES	NO	NO & PROVIDE ALTERNATIVE		
X			1.	The manufacturer's usual warranty shall apply and shall be in effect for at least one year after field assignment.
NOTES/COMMENTS:				

J. GENERAL REQUIREMENTS

YES	NO	NO & PROVIDE ALTERNATIVE		
X			1.	Dealer's decals, stickers or other signs shall not be affixed to units; manufacturer's nameplates, stampings and other similar signs are acceptable.
X			2.	Units must be completely assemble and ready for use.
X			3.	Vendor will weld Department or Transportation furnished 5 digit equipment number on body of plow. The digit number will be between two and four inches high and be welded on before painting.

NOTES/COMMENTS:

K. ATTACHMENT – NON QUICK ATTACH FOR HYDRAULICALLY REVERSIBLE SNOW PLOW

YES	NO	NO & PROVIDE ALTERNATIVE	
X			1. A-FRAME
X			A. The attaching ears from the A-frame will be made thirty inches plus or minus ½ inch from centerline to centerline of the ears.
X			B. Width of ears to be on inch steel or reinforced cast iron.
X			C. Attaching pin holes to be 1-5/16 inches in diameter.
X			D. Lifting chains with miscellaneous hardware for attaching to top lifting arm must be provided.
X			E. Snow plow hitch with top lifting arm for truck is not required.
X			F. Bottom attaching pins are also no required.
NOTES/COMMENTS:			

L. ANNAUL USAGE, ESTIMATED

YES	NO	NO & PROVIDE ALTERNATIVE	
X			1. Annual usage figures provided are estimates and are not to be construed as either a minimum or maximum purchase quantity. The orders shall be for the actual quantities of each item ordered by or for any agency during the life of the contract. Vendor shall not impose minimum order requirements.
X			2. Insert annual estimated usage here (may use Table Tools/Draw Table function to add more lines or may enlarge the size of the table to accommodate specifications)
NOTES/COMMENTS:			

M. USAGE REPORT

YES	NO	NO & PROVIDE ALTERNATIVE		
X			1.	The vendor shall, provide a quarterly usage report of this contract by state agencies and political subdivisions. Information will include agency name, item, and dollar amount. Information may be requested at any time by the SPB, as determined by the State.
NOTES/COMMENTS:				

N. DELIVERY AFTER RECEIPT OF ORDER

YES	NO	NO & PROVIDE ALTERNATIVE		
		X	1.	Delivery desired within 45 – 60 days after receipt of order(s). At the time of delivery, a designated State employee will sign the "invoice/packing slip." This signature will only indicate that the order has been received and that the items actually delivered agree with the delivery invoice. This signature does not indicate all items were received in good condition and/or that there is not possible hidden damage.
NOTES/COMMENTS: DELIVERY IS 60 – 120 DAYS ARO				

O. DELIVERY LOCATION

YES	NO	NO & PROVIDE ALTERNATIVE	(BIDDER IS CERTIFYING THAT THEY CAN MEET THE DELIVER LOCATIONS/INSTRUCTIONS)	
X			1.	Nebraska Department of Transportation. 5001 S 14th Lincoln NE 68512
NOTES/COMMENTS:				

P. PACKAGING

YES	NO	NO & PROVIDE ALTERNATIVE		
X			1.	Cartons are to be clearly marked with size, weight, color, quantity, and the purchase order number. Cartons must be of suitable size and of sufficient strength to protect the contents during shipping, handling and storage.
NOTES/COMMENTS:				

Q. ORDERS

YES	NO	NO & PROVIDE ALTERNATIVE		
X			1.	Orders will be placed either by, phone, fax, e-mail or Internet (if available and not to the exclusion of the other methods). All orders must reference a purchase order number and the purchase order number must be referenced on the packing slip, and invoice. Invoices are to be sent to the "Invoice to" address on the purchase order.
NOTES/COMMENTS:				

R. QUALITY

YES	NO	NO & PROVIDE ALTERNATIVE		
X			1.	Product quality must meet specifications and be consistent for the term of the contract. A guarantee of satisfactory performance by the supplier and meeting delivery dates are considered to be an integral part of the purchase contract resulting from this bid invitation. All materials must be of first quality, under standard production by the manufacturer and be of standard design, complete as regularly advertised and marketed and be of proven performance. Products are to be fully guaranteed and may be returned for full credit or replacement (at the State's option) for any reason during the initial warranty period with no additional charges for shipping or restocking.
NOTES/COMMENTS:				

S. PRICES

YES	NO	NO & PROVIDE ALTERNATIVE		
X			1.	Price quoted shall be unit price and shall be firm for 180 days from date of an award and are to be net; including transportation and delivery charges fully prepaid by the Bidder F.O.B. Destination as specified. No additional charges will be allowed for packing, handling, fuel surcharge, or partial delivery costs. Any request for an increase must be submitted in writing to the SPB a minimum of thirty (30) days prior to proposed effective date of increase, and must show cause and be accompanied by supporting documentation (such as notification letter from manufacturer). Further documentation may be required by the State, to authenticate the increase (such as manufacturer invoices). Failure to supply any requested supporting documentation may be grounds to cancel the contract. In no instance may a price increases be billed to the State until the contract is amended. The State further reserves the right to reject any proposed price increase(s), cancel the contract and re-bid if determined to be in the best interest of the State. The State will be given full proportionate benefit of any decrease for the term of the contract. Contract supplier or suppliers may honor pricing and extend the contract to political sub-divisions, cities, and counties. Terms and conditions of the contract must be met by political sub-divisions, cities, and counties.

NOTES/COMMENTS:

T. AUTHORIZED DEALER & WARRANTY

YES	NO	NO & PROVIDE ALTERNATIVE		
X			1.	To the extent required by the manufacturer, the Bidder shall be an authorized dealer. Bidder may be required to substantiate that he/she is an authorized dealer. Proof, if required, must be submitted to the SPB within three (3) days of the request and prior to the award of any contract. The terms of the original manufacturer's standard warranty shall apply to all equipment acquired from this solicitation for the entire warranty period.
NOTES/COMMENTS:				

U. WARRANTY

YES	NO	NO & PROVIDE ALTERNATIVE		
X			1.	Contractor must warrant the average life expectancy supplies hereunder to be not less than that stated in the manufacturer's price list and agree to replace, without cost, all supplies failing to meet this requirement, except where the reduced life is due to conditions beyond the control of the Contractor. Defective parts or those damaged in shipment must be replaced by the Contractor at no charge to the State. The manufacturer's standard warranty shall apply and be in effect for at least one (1) year from the date the equipment was placed in service.
NOTES/COMMENTS:				

V. SUBSTITUTIONS

YES	NO	NO & PROVIDE ALTERNATIVE		
X			1.	Vendor will not substitute any item that has been awarded without prior written approval of SPB.
NOTES/COMMENTS:				

W. SECRETARY OF STATE REGISTRATION REQUIREMENTS

CHOOSE "YES" TO BEST ANSWER ONLY, CHOOSE "NO" FOR REMAINING LINES

YES	NO	***Prior to contract award and/or upon request of SPB, potential award recipient(s) will be asked to certify compliance with Nebraska Secretary of State Registration by providing a true and exact copy of current (dated within 90 days) valid Certificate of Good Standing or Letter of Good Standing.**
	X	**1.** Bidder is a SOLE PROPRIETORSHIP (in which case, no Letter of Good Standing/Certificate of Good Standing is required) If the Bidder is an Individual or Sole Proprietorship, the following applies: a. The Bidder must complete the United States Citizenship Attestation Form, available on the Department of Administrative Services website at http://das.nebraska.gov/materiel/purchasing.html The completed United States Attestation Form should be submitted with the Invitation to Bid response. b. If the Bidder indicates on such attestation form that he or she is a qualified alien, the Contractor agrees to provide the U.S. Citizenship and Immigration Services documentation required to verify the Contractor's lawful presence in the United States using the Systematic Alien Verification for Entitlements (SAVE) Program. c. The Bidder understands and agrees that lawful presence in the United States is required and the Contractor may be disqualified or the contract terminated if such lawful presence cannot be verified as required by Neb. Rev. Stat. § 4-108.
	X	**2.** Bidder is a GENERAL PARTNERSHIP (in which case, no Letter of Good Standing/Certificate of Good Standing is required).
	X	**3.** Bidder is a FOREIGN or DOMESTIC CORPORATION or BUSINESS and a copy of current Letter of Good Standing/Certificate of Good Standing from the Nebraska Secretary of State is provided within bid submission documents.
X		**4.** Bidder is a FOREIGN or DOMESTIC CORPORATION or BUSINESS and a copy of current Letter of Good Standing/Certificate of Good Standing from the Nebraska Secretary of State will be provided in a timely manner upon request prior to award.

Form A
Bidder Contact Sheet
Invitation To Bid Number 5724 OF

Form A should be completed and submitted with each response to this ITB. This is intended to provide the State with information on the Bidder's name and address, and the specific person(s) who are responsible for preparation of the Bidder's response.

Preparation of ITB Contact Information	
Bidder Name:	NORTHERN TRUCK EQUIPMENT CORP
Bidder Address:	PO BOX 2435 SIOUX FALLS, SD 57101
Contact Person & Title:	JOHN WARTENBEE VICE PRESIDENT
E-mail Address:	JWARTENBEE@NTECORP.COM
Telephone Number (Office):	605-543-5206
Telephone Number (Cellular):	605-929-3400
Fax Number:	605-543-5219

Each Bidder shall also designate a specific contact person who will be responsible for responding to the State if any clarifications of the Bidder's response should become necessary.

Communication with the State Contact Information	
Bidder Name:	NORTHERN TRUCK EQUIPMENT CORP
Bidder Address:	PO BOX 2435 SIOUX FALLS, SD 57101
Contact Person & Title:	JOHN WARTENBEE VICE PRESIDENT
E-mail Address:	JWARTENBEE@NTECORP.COM
Telephone Number (Office):	605-543-5206
Telephone Number (Cellular):	605-929-3400
Fax Number:	605-543-5219

Attachment 1

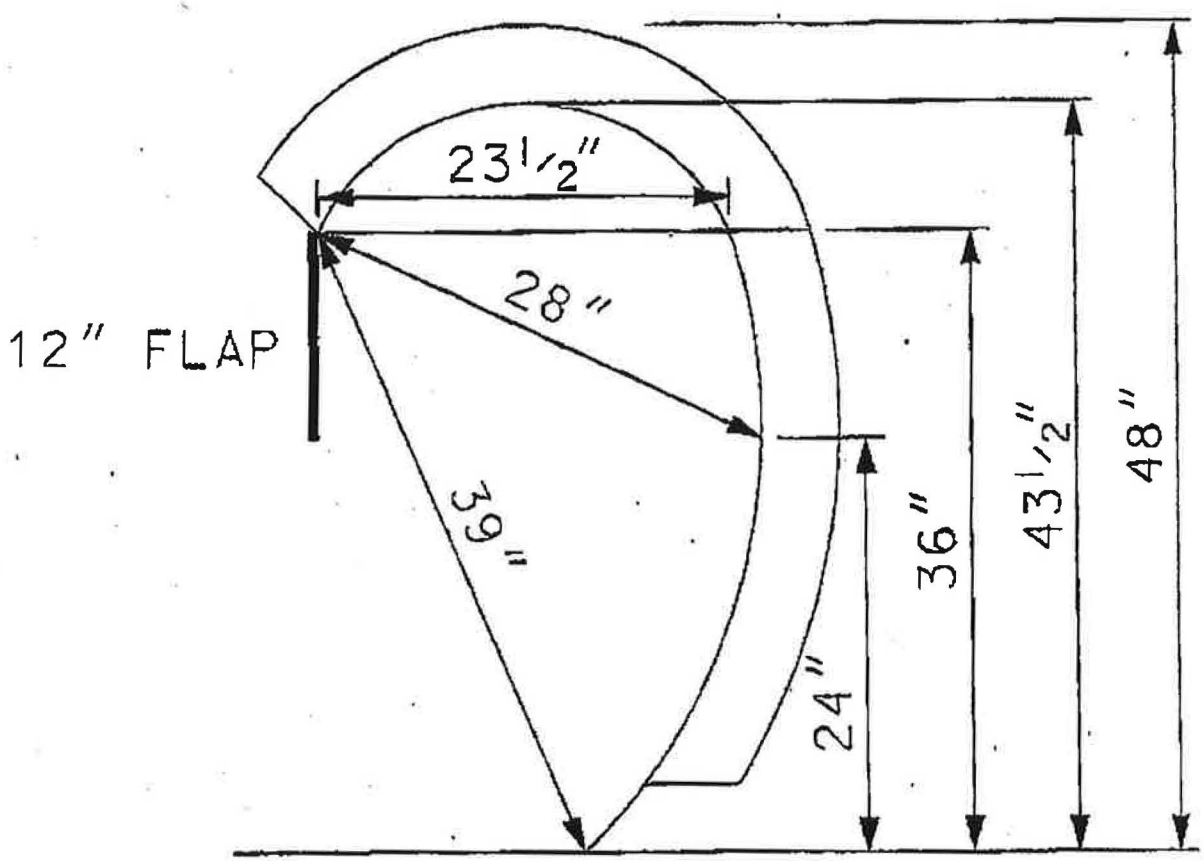

INVERTED "J" SNOWPLOW

VALK SNOWPLOWS

TTE SERIES – TORSION TRIP EDGE PLOWS

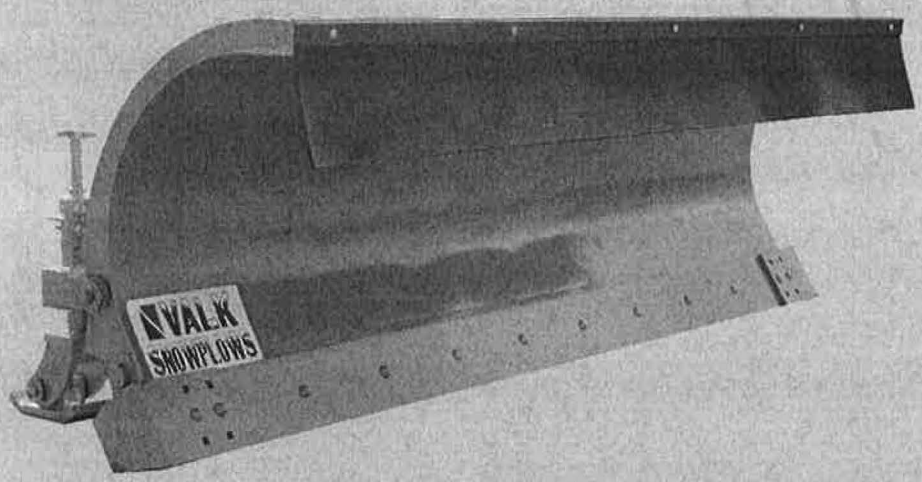

STANDARD FEATURES

- 10 Gauge steel moldboard
- Built-In snow shield
- One piece torsion trip edge
- ¾" square wire or 13/16" round wire adjustable torsion springs
- Heavy duty 4" square front push beam
- Boxed in A-frame
- Massive 3-1/2" x 16" reversing cylinders
- Reversible 35 degrees left and right
- ½" x 8" Center punched cutting edge
- 10', 11', 12', 13' and 14' Models available
- 36" and 42" Models available

OPTIONS

- 3/16" Moldboard in lieu of 10 gauge
- Stainless steel moldboard
- 3/8" UHMW polyethylene moldboard
- Rubber snow shield
- Adjustable skid shoe assemblies
- Adjustable mushroom shoe assemblies
- Adjustable steel caster wheel assemblies
- 5/8" x 8" or ¾" x 8" Cutting edge
- 3'4" x 6" Carbide blade with ½" x 6" cover blade
- Mouse ear discharge – single or double
- Rubber blade or Polyurethane blade
- Jack stand

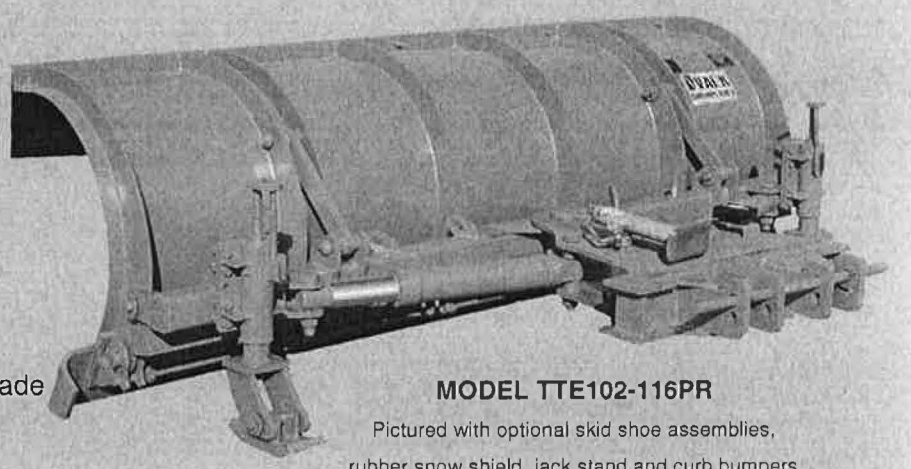

MODEL TTE102-116PR

Pictured with optional skid shoe assemblies, rubber snow shield, jack stand and curb bumpers

Northern Truck Equipment Corp

NTEC

Sioux Falls, SD 605-543-5206
Rapid City, SD 605-341-8780
Fargo, ND 701-281-1718

www.ntecorp.com

VALK MANUFACTURING COMPANY
P.O. BOX 428
66 EAST MAIN STREET
NEW KINGSTOWN, PA 17072

PHONE: 717-766-0711 *WEBSITE: WWW.VALKMFG.COM* *FAX: 717-697-6297*

VALK SNOWPLOWS

TTE SERIES – TORSION TRIP EDGE PLOWS

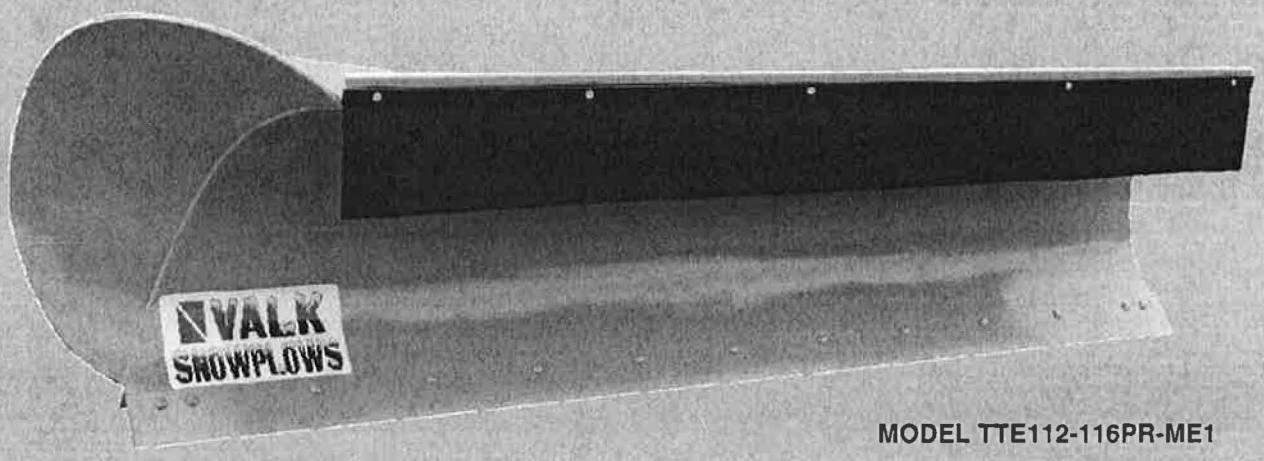

MODEL TTE112-116PR-ME1

Pictured with optional rubber snow shield,
Single discharge mouse ear

Model	Length	Height	Cutting Width at 37 Degrees	Approx Weight
TTE102-116PR	10'	36"	8'	2400 LBS
TTE103-116PR	10'	42"	8'	2500 LBS
TTE112-116PR	11'	36"	8' 9"	2560 LBS
TTE113-116PR	11'	42"	8' 9"	2660 LBS
TTE122-116PR	12'	36"	9' 6"	2720 LBS
TTE123-116PR	12'	42"	9' 6"	2820 LBS
TTE132-116PR	13'	36"	10' 5"	2880 LBS
TTE133-116PR	13'	42"	10' 5"	2980 LBS
TTE142-116PR	14'	36"	11' 4"	3050 LBS
TTE143-116PR	14'	42"	11' 4"	3150 LBS

THIS LITERATURE MAY NOT MEET EXACT SPECIFICATIONS REQUESTED. THE PRODUCT WILL BE BUILT TO SPECIFICATIONS UNLESS VARIATIONS ARE NOTED.

VALK MANUFACTURING COMPANY
P.O. BOX 428
66 EAST MAIN STREET
NEW KINGSTOWN, PA 17072

PHONE: 717-766-0711 *WEBSITE: WWW.VALKMFG.COM* *FAX: 717-697-6297*

P.O. BOX 428
NEW KINGSTOWN, PA 17072-0428

VALK MANUFACTURING COMPANY

SNOW PLOW WARRANTY

VALK MANUFACTURING COMPANY WARRANTS THAT EACH SNOW PLOW DELIVERED WILL BE WARRANTED FROM DEFECTS IN MATERIAL OR WORKMANSHIP FOR A PERIOD OF ONE YEAR

VALK MANUFACTURING COMPANY

Robert P. Lang

ROBERT P. LANG
VICE PRESIDENT
SNOW PLOW DIVISION

THIS LITERATURE MAY NOT MEET EXACT SPECIFICATIONS REQUESTED. THE PRODUCT WILL BE BUILT TO SPECIFICATIONS UNLESS VARIATIONS ARE NOTED.

Northern Truck Equipment Corp

NTEC

www.ntecorp.com

Sioux Falls, SD 605-543-5206
Rapid City, SD 605-341-8780
Fargo, ND 701-281-1718

WEBSITE: www.valkmfg.com

FAX: (717) 697-6297

PHONE: (717) 766-0711

ADDENDUM ONE
QUESTIONS and ANSWERS

Date: December 7, 2017

To: All Bidders

From: Dianna Gilliland, Buyer
AS Materiel State Purchasing Bureau

RE: Addendum for Invitation to Bid Number 5724 OF
to be opened December 15, 2017 at 2:00 p.m. Central Time

Questions and Answers

Following are the questions submitted and answers provided for the above mentioned Invitation to Bid. The questions and answers are to be considered as part of the Invitation to Bid. It is the Bidder's responsibility to check the State Purchasing Bureau website for all addenda or amendments.

Question Number	Question	State Response
1.	I was wondering can you send me the price that the state of Nebraska paid Wausau for the following items and the date purchased along with the number of units purchased? 1) Hydraulically Reversible Trip Edge Snow Plow with 11' Steel Blades. 2) Hydraulically Reversible Trip Edge Snow Plow with 12' Steel Blades.	Nebraska Department of Transportation typically purchases 20-25 plows per year between the different contracts. The plows are ordered on an as needed basis. No eleven foot plows were purchased last year. The last price paid for a 12 foot plow was $5,389.04.

This addendum will become part of the ITB and should be acknowledged with the Invitation to Bid.