BOOM/VALVE - 3 LANE, DUAL, CENTER

PARTS LIST					PARTS LIST				
ITEM	MILD	304SS	QTY	DESCRIPTION	ITEM	MILD	304SS	QTY	DESCRIPTION
1	107308	107308	1	VALVE,MANIFOLD,3 SECTION,ELECT.	21	89722	89722	3	CLAMP,FLANGE,1" STD PORT
2	52844	52844	9	SCREW, CP, HX, 5/16NC X 1 1/4,SS	22	115027	115027	3	ADAPTER,16FLG/24HB,POLY
3	52770	52770	15	NUT,CENTERLOCK,5/16-18NC,SS	23	109709	109709	10	CLAMP,T-BOLT,1 1/2 HOSE
4	51238	51238	30	WASHER,FLAT,5/16,SS	24	109694	109694	24	HOLDER, NOZZLE BODY
5	89721	89721	2	GASKET,2",STD PORT,EPDM	25	109706	109706	24	NOZZLE,BALL,HOLDER,PLASTIC
6	89723	89723	2	CLAMP,FLANGE,2" STD PORT	26	324403	324403	3'	HOSE,POLY,RIBBED,EPDM,2"
7	107801	107801	1	PLUG,32 FLG, POLY	27	108336	108336	2	TUBE, WLDT,OUTSIDE, BOOM, LAS
8	107803	107803	1	ADAPTER,32FLG/32HB,POLY	28	324402	324402	8'	HOSE,POLY,RIBBED,EPDM,1-1/2"
9	107798	107798	2	CLAMP,HOSE,T-BOLT,2.0	29	324402	324402	4'	HOSE,POLY,RIBBED,EPDM,1-1/2"
10	108339	108339	2	TUBE, WLDT,CENTER, BOOM, LAS	30	89504	89504	1	VALVE,BALL,24MP,3 WAY,POLY
11	108102	108102.304	2	BRKT,SIDE,REAR,NOZZLE,RH/LH	31	115285	115285.304	1	BRACKET,VALVE,MOUNT
12	50336	51227	4	SCREW,CP,HX,3/8NC X 1 1/4 G5	32	324402	324402	2'	HOSE,POLY,RIBBED,EPDM,1-1/2"
13	10538	50794	8	WASHER, FLAT, STD, 3/8 ID	33	108120.304	108120.304	4	PLATE,SPACER,U-BOLT
14	51385	52768	4	NUT,CENTERLOCK,3/8-16NC	34	82571	82571	4	SCREW, CP, HX, 5/16NC X 1 1/2,SS
15	109695	109695	8	U-BOLT,2" CLAMP	35	11412	1412	2	SCREW,CP,HX,5/16NC X 1 G5,SS
16	89713	89713	4	ADAPTER,24MP/24MP,POLY	36	89716	89716	2	ELBOW,24MP/24HB,POLY
17	109700	109700	4	VALVE,CHECK,SPRING,1 1/2"	37	316002	316002	2	ELBOW,24MP/24FP,POLY
18	109702	109702	4	ADAPTER,MALE,1 1/2" MP/STD	38	105035	105035	1	ADAPTER,24MP/24HB,POLY
19	109701	109701	4	CAP,FEMALE,1 1/2" HOSE SHANK	39	324402	324402	3'	HOSE,POLY,RIBBED,EPDM,1-1/2"
20	89720	89720	3	GASKET,1",STD PORT,EPDM	40	324402	324402	3'	HOSE,POLY,RIBBED,EPDM,1-1/2"

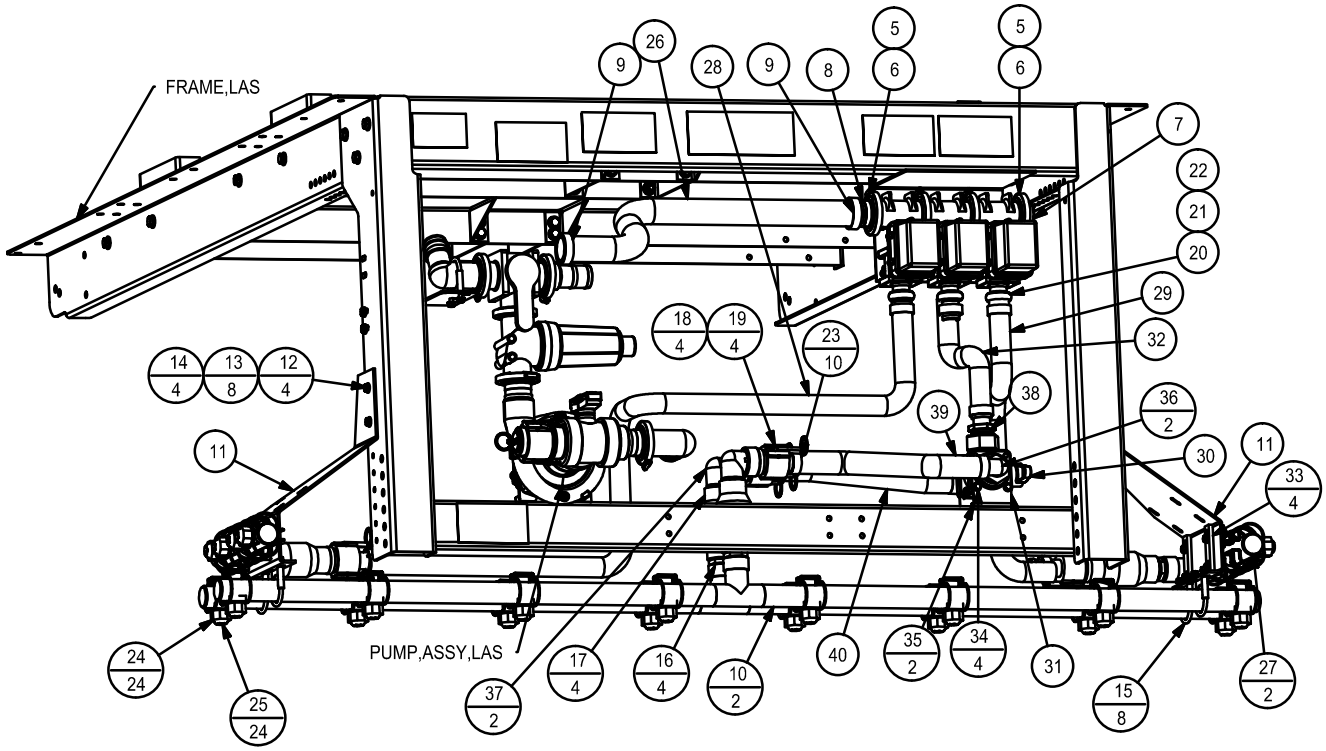

BOOM VALVE-3 LANE-DUAL-CENTER