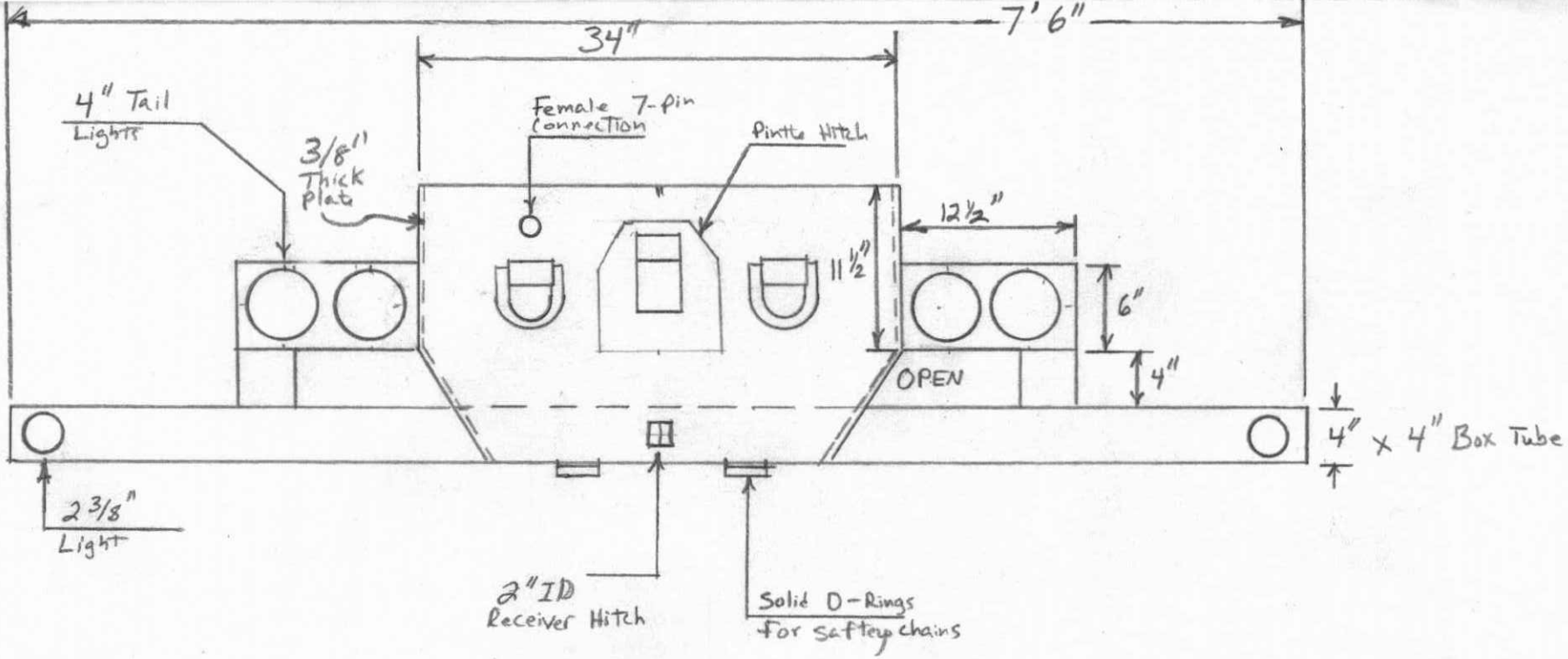

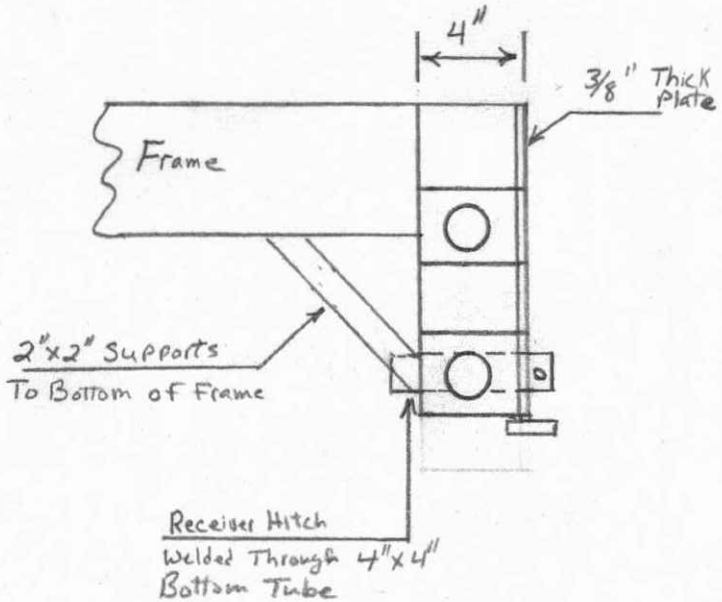

Overall width of Truck frame may vary

Not drawn To scale

J. Lavicky