State of Nebraska - INVITATION TO BID
CONTRACT

Date	3/30/15	**Page**	1 of 4
Solicitation Number	4952 OF		
Opening Date and Time	04/27/15 2:00 pm		
Buyer	ANNETTE WALTON (AS)		

Return to:
State Purchasing Bureau
1526 K Street, Suite 130
Lincoln, Nebraska 68508
OR
P.O. Box 94847
Lincoln, NE 68509-4847
Telephone: 402-471-6500
Fax: 402-471-2089

DESTINATION OF GOODS

MULTIPLE DELIVERY LOCATIONS PLEASE REFER TO DOCUMENTATION FOR DELIVERY ADDRESSES.

Per Nebraska' s Transparency in Government Procurement Act, DAS is required to collect statistical information regarding the number of contracts awarded to Nebraska contractors. This information is for statistical purposes only and will not be considered for contract award purposes.

_____NEBRASKA CONTRACTOR AFFADAVIT: Bidder hereby attests that bidder is a Nebraska Contractor. " Nebraska Contractor" shall mean any bidder who has maintained a bona fide place of business and at least one employee within this state for at least the six (6) months immediately preceding the posting date of this ITB.

_____ I hereby certify that I am a Resident disabled veteran or business located in a designated enterprise zone in accordance with Neb. Rev. Stat. §73-107 and wish to have preference, if applicable, considered in the award of this contract.

Contract to supply and deliver Traffic Signal Controler and Cabinets to the State of Nebraska as per the attached specifications for a one (1) year period from date of award. The contract may be renewed for four (4) additional one (1) year periods when mutually agreeable to the vendor and the State of Nebraska. The State reserves the right to extend the period of this contract beyond the termination date when mutually agreeable to the vendor and the State of Nebraska.

The State may request that payment be made electronically instead of by state warrant. ACH/EFT Enrollment Form can be found at: <http://www.das.state.ne.us/accounting/forms/achenrol.pdf>

The Contractor is required and hereby agrees to use a federal immigration verification system to determine the work eligibility status of employees physically performing services within the State of Nebraska. A federal immigration verification system mean the electronic verification of the work authorization program authorized by the Illegal Immigration Reform and Responsibility Act of 1996, 8 U.S.C. 1324a, known as E-Verify Program, or an equivalent federal program designed by the United States Department of Homeland Security or other federal agency authorized to verify the work eligibility status of a newly hired employee.

The contractor, by signature to the Invitation to Bid, certifies that the contractor is not presently debarred, suspended, proposed for debarment, declared ineligible, or voluntarily excluded by any federal department or agency from participating in transactions (debarred). The contractor also agrees to include the above requirements in any and all subcontracts into which it enters. The contractor shall immediately notify the Department if, during the term of this contract, contractor becomes debarred. The Department may immediately terminate this contract by providing contractor written notice if contractor becomes debarred during the term of this contract.

If the Contractor is an individual or sole proprietorship, the following applies:

No Bid Respond: ( ) Remove From Class-Item OR ( ) Keep Active For Class-Item

BIDDER MUST COMPLETE THE FOLLOWING

DISCOUNT PAYMENT TERMS:_____% _____ DAYS

By signing this Invitation to Bid, the bidder agrees to the "Standard Conditions and Terms of Bid Solicitation and Offer" and is committed to provide a drug free work place environment. Vendor will furnish the items requested within_____ days after receipt of order. Failure to enter Delivery Date may cause quotation to be REJECTED.

Sign Here _____
(Authorized Signature MANDATORY - MUST BE SIGNED IN INK)

Enter Contact Information Below

VENDOR# _____ **Contact** _____
VENDOR: _____ **Telephone** _____
Address: _____ **Facsimile** _____
_____ **Email** _____
_____ _____

State of Nebraska - INVITATION TO BID CONTRACT

Date	3/30/15	**Page**	2 of 4
Solicitation Number	4952 OF		
Opening Date and Time	04/27/15 2:00 pm		
Buyer	ANNETTE WALTON (AS)		

Return to:
State Purchasing Bureau
1526 K Street, Suite 130
Lincoln, Nebraska 68508
OR
P.O. Box 94847
Lincoln, NE 68509-4847
Telephone: 402-471-6500
Fax: 402-471-2089

DESTINATION OF GOODS

MULTIPLE DELIVERY LOCATIONS PLEASE REFER TO DOCUMENTATION FOR DELIVERY ADDRESSES.

1. The Contractor must complete the United States Citizenship Attestation Form, available on the Department of Administrative Services website at: <http://das.nebraska.gov/lb403/attestation_form.pdf>
2. If the Contractor indicates on such attestation form that he or she is a qualified alien, the Contractor agrees to provide the US Citizenship and Immigration Services documentation require to verify the Contractor's lawful presence in the United States using the Systematic Alien Verification for Entitlements (SAVE) Program.
3. The Contractor understands and agrees that lawful presence in the United States is required and the Contractor may be disqualified or the contract terminated if such lawful presence cannot be verified as required by Neb. Rev. Stat. §4-108.

The contract resulting from the Invitation to Bid shall incorporate the following documents:

1. Amendment to Contract Award with the most recent dated amendment having the highest priority;
2. Contract Award and any attached Addenda;
3. The signed Invitation to Bid form and the Contractor' s bid response;
4. Amendments to ITB and any Questions and Answers; and
5. The original ITB document and any Addenda.

These documents constitute the entirety of the contract.

Unless otherwise specifically stated in a contract amendment, in case of any conflict between the incorporated documents, the documents shall govern in the following order of preference with number one (1) receiving preference over all other documents and with each lower numbered document having preference over any higher numbered document: 1) Amendment to Contract Award with the most recent dated amendment having the highest priority, 2) Contract Award and any attached Addenda, 3) the signed Invitation to Bid form and the Contractor' s bid response, 4) Amendments to ITB and any Questions and Answers, 5) the original ITB document and any Addenda.

Any ambiguity in any provision of this contract which shall be discovered after its execution shall be resolved in accordance with the rules of contract interpretation as established in the State of Nebraska.
Once Invitations to Bid are opened they become the property of the State of Nebraska and will not be returned.

It is understood by the parties that in the State of Nebraska' s opinion, any limitation on the contractor' s liability is unconstitutional under the Nebraska State Constitution, Article XIII, Section III and that any limitation of liability shall not be binding on the State of Nebraska despite inclusion of such language in documents supplied by the contractor' s bid response.

State Statute §73-107 allows for a preference for a resident disabled veteran or business located in a designated enterprise zone. When a state contract is to be awarded to the lowest responsible bidder, a resident disabled veteran or a business located in a designated enterprise zone under the Enterprise Zone Act shall be allowed a preference over any other resident or nonresident bidder, if all other factors are equal.

Resident disabled veterans means any person (a) who resides in the State of Nebraska, who served in the United States Armed Forces, including any reserve component or the National Guard, who was discharged or otherwise separated with a characterization of honorable or general (under honorable conditions), and who possesses a disability rating letter issued by the United States Department of Veterans Affairs establishing a service-connected disability or a disability determination from the United States Department of Defense and (b)(i) who owns and controls a business or, in the case of a publicly owned business, more than fifty percent of the stock is owned by one or more persons described in subdivision (a) of this subsection and (ii) the management and daily business operations of the business are controlled by one or more persons described in subdivision(a) of this subsection. Any contract entered into without compliance with this section shall be null and void.

Therefore, if a resident disabled veteran or business located in a designated enterprise zone submits a bid in accordance with Neb. Rev. Stat. §73-107 and has checked " yes" requesting priority/preference to be considered in the award of this contract, the following will need to be submitted by the vendor within 10 business days of request:

State of Nebraska - INVITATION TO BID
CONTRACT

Date	3/30/15	**Page**	3 of 4
Solicitation Number	4952 OF		
Opening Date and Time	04/27/15 2:00 pm		
Buyer	ANNETTE WALTON (AS)		

Return to:
State Purchasing Bureau
1526 K Street, Suite 130
Lincoln, Nebraska 68508
OR
P.O. Box 94847
Lincoln, NE 68509-4847
Telephone: 402-471-6500
Fax: 402-471-2089

DESTINATION OF GOODS

MULTIPLE DELIVERY LOCATIONS PLEASE REFER TO DOCUMENTATION FOR DELIVERY ADDRESSES.

a. Documentation from the United States Armed Forces confirming service,
b. Documentation of discharge or otherwise separated characterization of honorable or general (under honorable conditions),
c. Disability rating letter issued by the United States Department of Veterans Affairs establishing a service-connected disability or a disability determination from the United States Department of Defense; and
d. Documentation which shows ownership and control of a business or, in the case of a publicly owned business, more than fifty percent of the stock is owned by one or more persons described in subdivision (a) of this subsection; and the management and daily business operations of the business are controlled by one or more persons described in subdivision (a) of this subsection.

Failure to submit the requested documentation within 10 business days of notice will disqualify the bidder from consideration of the preference.

(bl 03/27/15)

A response to this Solicitation is subject to, but not limited to, the included Standard Conditions and Terms. PLEASE READ CAREFULLY!

IT IS THE RESPONSIBILITY OF THE BIDDER TO REFER TO STATE PURCHASING BUREAU'S WEB SITE FOR ALL INFORMATION RELEVANT TO THIS SOLICITATION TO INCLUDE ADDENDA AND/OR AMENDMENTS THAT MAY BE ISSUED PRIOR TO THE OPENING DATE.
http://www.das.state.ne.us/materiel/purchasing/purchasing.html

Bid Tabulations are available on the internet at http://www.das.state.ne.us/materiel/purchasing/bidtabs.htm

This form is part of the specification package and must be signed and returned, along with all documents, by the opening date and time specified.

Any questions regarding this solicitation must be directed to State Purchasing Bureau, to the attention of the buyer. It is preferred that questions be sent via e-mail to matpurch.dasmat@nebraska.gov. Questions may also be sent by facsimile to 402-471-2089. Refer to specification for additional information.

No facsimile or email solicitation responses will be accepted.

INVITATION

Line	Description	Quantity	Unit of Measure	Unit Price	Extended Price
1	**TRAFFIC SIGNAL CONTROLLER** 52-02015 2070E CONTROLLER	**30.0000**	**EA**	_____	_____
2	**TRAFFIC SIGNAL CONTROLLER** 52-02140 332L CABINET	**20.0000**	**EA**	_____	_____
3	**TRAFFIC SIGNAL CONTROLLER** 52-02150 336L CABINET	**10.0000**	**EA**	_____	_____

STANDARD CONDITIONS AND TERMS OF BID SOLICITATION AND OFFER Invitations to Bid and Contract Awards

It is the responsibility of the bidder to check the website for all information relevant to this solicitation to include addenda and/or amendments issued prior to the opening date. Website address: http://www.das.state.ne.us/materiel/purchasing/purchasing.htm

SCOPE- These standard conditions and terms of bid solicitation and acceptance apply in like force to this inquiry and to any subsequent contract resulting therefrom.

PRICES- Prices quoted shall be net, including transportation and delivery charges fully prepaid by the bidder, F.O.B. destination named in the Invitation to Bid. No additional charges will be allowed for packing, packages or partial delivery costs. When an arithmetic error has been made in the extended total, the unit price will govern.

EXECUTION- Bids must be signed in ink by the bidder on the State of Nebraska's Invitation to Bid form. All bids must be typewritten or in ink on the State of Nebraska's Invitation to Bid form. Erasures and alterations must be initialed by the bidder in ink. No telephone or voice bids will be accepted. Failure to comply with these provisions may result in the rejection of the bid.

FACSIMILE DOCUMENTS- The State Purchasing Bureau will only accept facsimile responses to Invitations to Bid on bids under $25,000 and up to ten (10) pages. **However, two party sealed bids containing facsimile pages are acceptable.** No direct facsimile solicitation responses will be accepted for a commodity contract.

VALID BID TIME- Bids shall be firm for a minimum of sixty (60) calendar days after the opening date, unless otherwise stipulated by either party in the Invitation to Bid.

DISCOUNTS- Prices quoted shall be inclusive of ALL trade discounts. Cash discount terms of less than thirty (30) days will not be considered as part of the bid. Cash discount periods will be computed from the date of receipt of a properly executed claim voucher or the date of completion of delivery of all items in a satisfactory condition, whichever is later.

PAYMENT- Payment will be made by the responsible agency in conjunction with the State of Nebraska Prompt Payment Act 81-2401 through 2408. The State may request that payment be made electronically instead of by state warrant.

COLLUSIVE BIDDING- The bidder guarantees that the prices quoted have been arrived at without collusion with other eligible bidders and without effort to preclude the State of Nebraska from obtaining the lowest possible competitive price.

LUMP SUM OR ALL OR NONE BIDS- The State reserves the right to purchase item-by-item, by groups or as a total when the State may benefit by so doing. Bidders may submit a bid on an "all or none" or "lump sum" basis but should also submit a bid on an item-by-item basis. The term "all or none" means a conditional bid which requires the purchase of all items on which bids are offered and bidder declines to accept award on individual items; a "lump sum" bid is one in which the bidder offers a lower price than the sum of the individual bids if all items are purchased but agrees to deliver individual items at the prices quoted.

SPECIFICATIONS- Any manufacturer's names, trade names, brand names, information and/or catalog numbers listed in a specification are for reference and not intended to limit competition, but will be used as the standard by which equivalent material offered will be judged. The State Purchasing Director will be the sole judge of equivalency. The bidder may offer any brand which meets or exceeds the specification. When a specific product is required, the Invitation to Bid will so state. Any item bid is to be the latest current model under standard production at the time of order. No used or refurbished equipment will be accepted, unless otherwise stated.

ALTERNATE/EQUIVALENT BIDS- Bidder may offer bids which are at variance from the express specifications of the Invitation to Bid. The State reserves the right to consider and accept such bids if, in the judgement of the State Purchasing Director, the bid will result in goods and/or services equivalent to or better than those which would be supplied in the original bid specifications. Bidders must indicate on the Invitation to Bid the manufacturer's name, number and shall submit with their bid, sketches, descriptive literature and/or complete specifications. Reference to literature submitted with a previous bid will not satisfy this provision. Bids which do not comply with these requirements are subject to rejection. In the absence of any stated deviation or exception, the bid will be accepted as in strict compliance with all terms, conditions and specifications, and the bidder shall be held liable therefore.

SAMPLES- When requested, samples shall be furnished at the bidders expense prior to the opening of the bid, unless otherwise specified. Each sample must be labeled clearly and identify the bidders name, the Invitation to Bid number and the item number. Samples submitted must be representative of the commodities or equipment which would be delivered if awarded the bid. The State of Nebraska reserves the right to request samples even though this may not have been set forth in the Invitation to Bid. Samples not destroyed in testing will be returned at bidders expense, if requested, or will be donated to a public institution.

RECYCLING- Preference will be given to items which are manufactured or produced from recycled material or which can be readily reused or recycled after their normal use as per State Statute Section 81-15,159.

LATE BIDS- All bids will be time and date stamped upon receipt by the State Purchasing Bureau, and this shall be the official time and date of receipt. Bids received after the time of the bid opening will be considered late bids and will be returned to the bidder unopened. The State Purchasing Bureau is not responsible for late bids or lost requests due to mail service inadequacies, traffic or other similar reasons.

BID OPENING- Openings shall be public on the date and time specified on the Invitation to Bid form. It is the bidder's responsibility to assure the bid is delivered at the designated date, time and place of the bid opening. Telephone bids are not acceptable. A bid may not be altered after opening of the bids.

NO BID- If not submitting a bid, respond by returning the Invitation to Bid form explaining the reason in the space provided. Failure to respond to an Invitation to Bid may be cause for the removal of the bidder's name from the mailing list. NOTE: To qualify as a respondent, bidder must submit a "NO BID" and it must be received no later than the stated bid opening date and time.

AWARD- All purchases, leases, or contracts which are based on competitive bids will be awarded to the lowest responsible bidder, determined according to the provisions of State Statute Section 81-161, R.R.S. 1943. The State reserves the right to reject any or all bids, wholly or in part and to waive any deviations or errors that are not material, do not invalidate the legitimacy of the bid and do not improve the bidders competitive position. All awards will be made in a manner deemed in the best interest of the State.

BID TABULATIONS- Tabulations will be furnished upon written request. A self-addressed, stamped envelope which must include the agency and solicitation number must be enclosed. Bid tabulations will not be provided by telephone or facsimile. Bid files may be examined during normal working hours by appointment. Bid tabulations are available on the website at: http://www.das.state.ne.us/materiel/purchasing/bidtabs.htm

PERFORMANCE AND DEFAULT- The State reserves the right to require a performance bond from the successful bidder, as provided by law, without expense to the State. Otherwise, in case of default of the contractor, the State may procure the articles from other sources and hold the contractor responsible for any excess cost occasioned thereby.

IN-STATE PREFERENCE- A resident bidder shall be allowed a preference against a nonresident from a state which gives or requires a preference to bidders from that state. The preference shall be equal to the preference given or required by the state of the nonresident bidders. Where the lowest responsible bid from a resident bidder is equal in all respects to one from a nonresident bidder from a state which has no preference law, the resident bidder shall be awarded the contract**.**

NONDISCRIMINATION- The Nebraska Fair Employment Practice Act prohibits contractors of the State of Nebraska, and their subcontractors, from discriminating against any employee or applicant for employment, to be employed in the performance of such contracts, with respect to hire, tenure, terms, conditions or privileges of employment because of race, color, religion, sex, disability, or national origin. (State Statute Sections 48-1101 through 48-1125) The bidder guarantees compliance with the Nebraska Fair Employment Practice Act, and breach of this provision shall be regarded as a material breach of contract. The contractor shall insert a similar provision in all subcontracts for services to be covered by any contract resulting from this Invitation to Bid.

TAXES- Purchases made by the State of Nebraska are exempt from the payment of Federal Excise Taxes, and exemption certificates will be furnished on request. State and local taxes are exempt by State Statute Section 77-2704 (l) (m) R.R.S. 1943 and must not be included in the bid prices. Exemption by statute precludes the furnishing of State exemption certificates.

DRUG POLICY - Bidder certifies that it maintains a drug free work place environment to ensure worker safety and workplace integrity. Contractor agrees to provide a copy of its drug free workplace policy at any time upon request by the State.

GRIEVANCE AND PROTEST- Grievance and protest procedure is available by contacting the buyer. Protest must be filed within ten (10) days of award.

NE ACCESS TECHNOLOGY STANDARDS- Vendor agrees to ensure compliance with Nebraska Access Technology Standards. See website at: http:/www.nitc.state.ne.us/standards/accessibility/

Revised: 02/2004

STATE OF NEBRASKA
STATE PURCHASING BUREAU

SCHEDULE OF EVENTS

The State expects to adhere to the tentative procurement schedule shown below. It should be noted, however, that some dates are approximate and subject to change.

	ACTIVITY	DATE/TIME
1	Release Invitation to Bid	March 30, 2015
2	Last Day to Submit Written Questions	April 13, 2015
3	State Responds to Written Questions Through an Addendum to be posted to the internet at: http://das.nebraska.gov/materiel/purchasing.html	April 15, 2015
4	Bid Opening Location: Nebraska State Purchasing Bureau 1526 K St. Suite 130 Lincoln, NE 68508	April 27, 2015 2:00 p.m. Central Time

WRITTEN QUESTIONS AND ANSWERS

Any explanation desired by a bidder regarding the meaning or interpretation of any Invitation to Bid provision must be submitted in writing to the State Purchasing Bureau and clearly marked "ITB Number 4952 OF; Traffic Signal Controller & Cabinets". It is preferred that questions be sent via e-mail to as.materielpurchasing@nebraska.gov Questions may also be sent by facsimile to 402-471-2089, but must include a cover sheet clearly indicating that the transmission is to the attention of Annette Walton, showing the total number of pages transmitted, and clearly marked "ITB Number 4952 OF; Traffic Signal Controller & Cabinets".

Written answers will be provided through an addendum to be posted on the internet at http://das.nebraska.gov/materiel/purchasing.html **on or before the date shown in the Schedule of Events.**

Traffic Signal Controller & Cabinets
2070E Controller
332L Cabinet
336L Cabinet
Terms and Conditions
4952 OF

SCOPE
It is the intent of this Invitation to Bid to establish a contract to supply **Traffic Signal Controller & Cabinets** per the attached specifications from date of award for a period of one (1) year with the option to renew for an additional four (4), one (1) year periods when mutually agreeable to the vendor and the State of Nebraska. The State reserves the right to extend the period of this contract beyond the end date when mutually agreeable to the vendor and the State of Nebraska.

All items bid shall be of the latest manufacture in production as of the date of the Invitation to Bid and be of proven performance and under standard design, complete as regularly advertised and marketed. All necessary materials for satisfactory performance of the supplies shall be incorporated into the **Traffic Signal Controllers and Cabinets** whether or not they may be specifically mentioned below.

Complete specifications, manufacturer's descriptive literature and/or advertising data sheets with cuts or photographs may be required prior to an award and should be included with the bid on the IDENTICAL items proposed. Literature should be complete and the latest published. Any information necessary to show compliance with these specifications not given on the manufacturer's descriptive literature and/or advertising data sheets should be supplied in writing on or attached to the bid document. If manufacturer's specifications sheets, descriptive literature, advertising data sheets or information necessary to show compliance with these specifications is not supplied in writing on or attached to the bid document, the bidder will be required to submit requested information within three (3) business days of a written request. Failure to submit requested descriptive literature or advertising data sheets may be grounds to reject the bid.

NON-COMPLIANCE STATEMENT
Read these specifications carefully. Any and all exceptions to these specifications must be written on or attached to quotation request. Any noncompliance may void your quotation. Non-compliance to any single specification can void your bid.

It is the responsibility of Bidders to obtain information and clarifications as provided below. The State of Nebraska is not responsible for any erroneous or incomplete understandings or wrongful interpretations of this Invitation to Bid by any Bidder.

No interpretation related to the meaning of bid specifications or other pre-bid documents will be made orally to any Bidder by the State of Nebraska. Any request for bid interpretation must be put in writing and faxed by the Bidder to: the State Purchasing Bureau, Fax (402) 471-2089 or e-mailed to AS Materiel Purchasing as.materielpurchasing@nebraska.gov by the last day to submit written questions that is specified in the Schedule of Events. (Inquiries received after the last day to submit written questions may not be addressed).

RIGHTS
The State reserves the right to waive technicalities; reject any or all bids, wholly or in part; and to waive any deviations or errors that are not material, do not invalidate the legitimacy of the bid, and do not improve the bidder's competitive position. This contract may be awarded item-by-item, group of items, or total, to best

serve the interest of the State of Nebraska. The State of Nebraska will be the sole judge of equivalence and any decision will be final. All awards will be made in a manner deemed in the best interest of the State.

SECRETARY OF STATE
Contract or purchase order awards may be limited to bidders authorized to transact business in the State of Nebraska. All awarded bidders are expected to comply with all Nebraska Secretary of State registration requirements. It is the responsibility of the bidder to comply with any registration requirements pertaining to types of business entities (e.g. person, partnership, foreign or domestic limited liability company, association, or foreign or domestic corporation or other type of business entity). The bidder who is the expected recipient of an award recommendation will be required to certify that it has so complied and produce a true and exact copy of its current (dated within 90 days), valid Certificate of Good Standing or Letter of Good Standing; or in the case registration is not required, to provide, in writing, the reason as to why none is required and complete the Individual or Sole Proprietor United States Attestation form. This must be accomplished prior to the award of the contract or purchase order. Further, all bidders shall comply with any and all other applicable Nebraska statutes regarding transacting business in the State of Nebraska. In order to expedite the award process, bidders are encouraged to submit their valid Certificate of Good Standing or Letter of Good Standing with their bid.

AWARD
All purchases, leases, or contracts which are based on competitive bids will be awarded to the lowest responsible bidder, determined according to the provision of State Statue Section §81-161, R.R.S 1943. The State reserves the right to reject any or all bids, wholly or in part and to waive any deviations or errors that are not material, do not invalidate the legitimacy of the bid and do not improve the bidder's competitive position. All awards will be made in a manner deemed in the best interest of the State.

AMENDMENT
This Contract may be amended at any time in writing upon the agreement of both parties.

REVISIONS
In the event any product is discontinued or replaced with a newer version during the contract period, the State of Nebraska reserves the right to amend this contract to include the new product.

ASSIGNMENT OF CONTRACT
The vendor will not assign, transfer or sub-contract any portion of this contract without the prior written consent of the State of Nebraska.

BREACH OF CONTRACT
If the Contractor breaches this Contract, the State of Nebraska may, at its discretion, terminate the Contract immediately upon written notice to the Contractor. The State of Nebraska shall pay the Contractor only for such performance as has been properly completed and is of use to the State of Nebraska. The State of Nebraska may, at its discretion, contract for provision of the goods or services required to complete this Contract and hold the Contractor liable for all expenses incurred in such additional contract over and above the total cost of performance. This provision shall not preclude the pursuit of other remedies for breach of contract as allowed by law.

TERMINATION
The contract may be terminated at any time upon the mutual consent of the parties, or by the State of Nebraska, with or without cause and/or consent upon thirty (30) days written notice.

TAXES
The State is not required to pay taxes of any kind and assumes no such liability as a result of this solicitation. Any property tax payable on the contractor's equipment which may be installed in a state-owned facility is the responsibility of the contractor.

PRICES
Price quoted shall be unit price and shall be firm for 180 days from date of an award and are to be net; including transportation and delivery charges fully prepaid by the bidder F.O.B. Destination as specified. No additional charges will be allowed for packing, handling, fuel surcharge, or partial delivery costs. Any request for an increase must be submitted in writing to the State Purchasing Bureau a minimum of 30 days prior to proposed effective date of increase, and must show cause and be accompanied by supporting documentation (such as notification letter from manufacturer). Further documentation may be required by the State, to authenticate the increase (such as manufacturer invoices). Failure to supply any requested supporting documentation may be grounds to cancel the contract. The State further reserves the right to reject any proposed price increase(s), cancel the contract and re-bid if determined to be in the best interest of the State. The State will be given full proportionate benefit of any decrease for the term of the contract. No price increases are to be billed to any State Agencies without prior written approval by the State Purchasing Bureau. Contract supplier or suppliers may honor pricing and extend the contract to political sub-divisions, cities, and counties. Terms and conditions of the contract must be met by political sub-divisions, cities, and counties.

QUALITY
Product quality must meet specifications and be consistent for the term of the contract. A guarantee of satisfactory performance by the supplier and meeting delivery dates are considered to be an integral part of the purchase contract resulting from this bid invitation. All materials must be of first quality, under standard production by the manufacturer and be of standard design, complete as regularly advertised and marketed and be of proven performance. Products are to be fully guaranteed and may be returned for full credit or replacement (at the State's option) for any reason and during the initial warranty period for all purchases during the duration of the contract with no additional charges for shipping or restocking.

GRAY MARKET PRODUCTS PROHIBITION
The State of Nebraska will not accept Gray Market Products for this solicitation. Gray Market is defined as the trade of a commodity through distribution channels which, while legal, are unofficial, unauthorized, or unintended by the original manufacturer. Gray Market items are not designed to be sold in a particular market and cannot be supported by the authorized importer because of various reasons.

AUTHORIZED DEALER AND WARRANTY
To the extent required by the manufacturer, the Bidder shall be an authorized dealer. Bidder may be required to substantiate that he/she is an authorized dealer. Proof, if required, must be submitted to the State Purchasing Bureau within three (3) days of the request and prior to the award of any contract. The terms of the original manufacturer's standard warranty shall apply to all equipment acquired from this solicitation for the entire warranty period.

WARRANTY
Contractor must warrant the average life expectancy supplies hereunder to be not less than that stated in the manufacturer's price list and agree to replace, without cost, all supplies failing to meet this requirement, except where the reduced life is due to conditions beyond the control of the contractor. Defective parts or those damaged in shipment must be replaced by the contractor at no charge to the State of Nebraska. The manufacturer's standard warranty shall apply and be in effect for at least one year from the date the equipment was placed in service.

SUBSTITUTIONS
Vendor will not substitute any item that has been awarded without prior written approval of State Purchasing Bureau.

ANNUAL USAGE
Annual usage figures provided are estimates and are not to be construed as either a minimum or maximum purchase quantity. The orders shall be for the actual quantities of each item ordered by or for any agency during the life of the contract. Vendor shall not impose minimum order requirements.

USAGE REPORT
The vendor shall, upon request by the State of Nebraska, provide an annual usage report of this contract by state agencies. Information will include agency name, item, and dollar amount. Information may be requested at any time by the State, but may typically be requested at the end of the contract period or upon renewal of the contract, or at other intervals (monthly, quarterly, etc.) as determined by the State.

DELIVERY
Deliveries are to be FOB destination to the Nebraska Department of Roads Warehouse, 5001 South 14th Street, Lincoln, Nebraska 68512 within 60 calendar days after receipt of order (ARO). Dock hours are 7:30 A.M. - 12:00 Noon and 1:00 P.M. - 4:00 P.M., Monday through Friday (excluding State holidays and / or as otherwise directed).

Late deliveries may be subject to a $50.00 per day penalty fee. Fees may be deducted from the vendor invoice. If delays in delivery are anticipated, the vendor shall notify the ordering agency of the expected delivery date. The order may be cancelled if delivery time is unsatisfactory and the State may then procure from other sources and the contractor may be held responsible for any excess cost. Bidder will impose no minimum order requirements.

At the time of delivery, a designated State of Nebraska employee will sign the "invoice/packing slip." This signature will only indicate that the order has been received and that the items actually delivered agree with the delivery invoice. This signature does not indicate all items were received in good condition and/or that there is not possible hidden damage.

ORDERS
Orders will be placed either by phone, fax, e-mail or Internet (if available and not to the exclusion of the other methods). All orders must reference a purchase order number and the purchase order number must be referenced on the packing slip, and invoice. Invoices are to be sent to the "Invoice to" address on the purchase order.

BASIS OF PAYMENT
Contractors should forward all invoices and supporting paperwork to the NDOR Operations, Procurement Division at 5001 S 14th Street, Bldg. 103, Lincoln, NE 68512. Invoices must show Vendor's Federal Identification (F.I.D.) Number and reference the purchase order number

PACKAGING
Cartons are to be clearly marked with Part Number & Purchase Order number. Cartons must be of suitable size and of sufficient strength to protect the contents during shipping, handling and storage.

PAYMENT
Payment will be made in conjunction with the State of Nebraska Prompt Payment Act §81-2401 through 2408. Payment shall be within 45 days of receipt of service or invoice, whichever is received later. Payment will be made by the responsible agency in compliance with the State of Nebraska Prompt Payment Act (See Neb. Rev. Stat. §81-2401 through 81-2408). The State may require the contractor to accept payment by electronic means such as ACH deposit. In no event shall the State be responsible or liable to pay for any services provided by the contractor prior to the Effective Date, and the contractor hereby waives any claim or cause of action for any such services.

SAMPLE(S)
Samples of the exact **Traffic Signal Controller and Cabinets** being bid may be required prior to an award, or at any time during the term of the contract. Samples are to be provided within ten (10) calendar days of a written request. Samples shall be provided at no cost to the State. Failure to provide samples or samples

not meeting the specifications may void the bid or constitute a breach of the contract resulting from this bid invitation. If requested by the bidder, samples will be returned at bidders' expense.

POLITICAL SUB-DIVISIONS
Contract supplier or suppliers may honor pricing and extend the contract to political sub-divisions, cities and counties. Terms and conditions of the contract must be met by political sub-divisions, cities and counties.

CUSTOMER SERVICE
The vendor shall list the name and phone number of the customer service representative who will be assigned to service the State of Nebraska's account:

Customer Service Representative: _____

Phone Number: _____

Fax Number: _____

E-mail Address: _____

Specification for Traffic Signal Controller 2070E

BIDDER INSTRUCTIONS

Bidder must respond to each of the following statements. Specifications listed are minimum conditions that must be met in order for a bidder to qualify for the award. A "YES" response means the bidder guarantees they can meet this condition. A "NO" response means the bidder cannot meet this condition and will not be considered. "NO & PROVIDE ALTERNATIVE" responses should be used only with a narrative response in the NOTES/COMMENTS section explaining in detail any deviation from the bidder's ability to meet the condition, and an explanation of how this would be determined to be an acceptable alternative to meeting the condition. Alternatives must be detailed in such a way that allows such deviations to be fully evaluated. The State of Nebraska shall determine at its sole discretion whether or not the vendor's alternative is an acceptable alternative.

YES	NO	NO & PROVIDE ALTERNATIVE	1. MATERIAL SPECIFICATIONS, Controller, 2070E
			A. The Model 2070E Traffic Signal Controller shall comply with The State of California Department of Transportation (Caltrans) Traffic Electrical Equipment Specification (TEES) dated March 12, 2009 or later (found: http://www.dot.ca.gov/hq/traffops/tech/tees-docs/TEES2009.pdf) and all Errata publications to present date. (found: http://www.trb.org/publications/pubserrata.aspx)
			B. Equipment shall be listed on the current Caltrans Qualified Products List (QPL) dated March 14, 2013 or later. (found: http://www.dot.ca.gov/hq/traffops/tech/qpl/tees_qpl.pdf)
NOTES/COMMENTS:			

Specification for Traffic Signal Controller 332L Cabinet

BIDDER INSTRUCTIONS

Bidder must respond to each of the following statements. Specifications listed are minimum conditions that must be met in order for a bidder to qualify for the award. A "YES" response means the bidder guarantees they can meet this condition. A "NO" response means the bidder cannot meet this condition and will not be considered. "NO & PROVIDE ALTERNATIVE" responses should be used only with a narrative response in the NOTES/COMMENTS section explaining in detail any deviation from the bidder's ability to meet the condition, and an explanation of how this would be determined to be an acceptable alternative to meeting the condition. Alternatives must be detailed in such a way that allows such deviations to be fully evaluated. The State of Nebraska shall determine at its sole discretion whether or not the vendor's alternative is an acceptable alternative.

YES	NO	NO & PROVIDE ALTERNATIVE	2. MATERIAL SPECIFICATIONS, Type 332L
			A. The Model 332L Signal Controller Cabinet and all equipment shall comply with Caltran (TEES) dated March 12,2009 (found:http://www.dot.ca.gov/hq/traffops/tech/tees-docs/TEES2009.pdf) and all Errata publications to present date or later (found: http://www.trb.org/publications/pubserrata.aspx) with the following exceptions:
			i. The cabinet shall be furnished with one Model 2010ECLip Monitor Unit (CMU) or equivalent. **Please specify make and model of conflict monitor:** _____
			ii. The output file #1 shall incorporate a 16 channel Red Monitoring Programming Board wired for Red Circuit Monitoring on all vehicle and pedestrian phases.
			• The Red Monitoring Programming Board shall utilize a 20 pin ribbon cable for connectivity to the Red Monitor interface on the 2010ECLip CMU.
			• The Red Monitoring Programming Board shall be installed on the rear panel of the Output file #1.
			• The Red Monitoring Programming Board shall be accessible for programming without removing the rear panel.
			• Channel programming selects between the Load switch output and AC+.
			• Channel programming shall be accomplished utilizing male jumper plugs.
			• A clear plastic cover shall be installed to protect any contact being made with the Red Monitoring Programming Board.
			iii.The cabinet shall be furnished with a C2P Modem Interconnect Harness connected to a PCB1B ten circuit connector. The PCB1B connector shall be mounted on the input panel and connected to TB1. See attachment A.

			B. Cabinet and all equipment shall be listed on the current Caltrans QPL dated March 14, 2013 or later (found: http://www.dot.ca.gov/hq/traffops/tech/qpl/tees_qpl.pdf)
			C. All plates, brackets, frames, wiring and other components pertaining to the cabinet shall be assembled at the factory.
			D. Controller unit support shelves in rack (1 unit rack space above pull out drawer).
			E. Required Option: The cabinet shall be furnished with all included Model 204 Flashers and Flash Relays.
			F. Required Option: 19" rack mount Pull Out Drawer Assembly shall be included and installed above the input file #1. The Drawer shall be capable of supporting a minimum of 50 lbs.
NOTES/COMMENTS:			

Specification for Traffic Signal Controller 336L Cabinet

BIDDER INSTRUCTIONS

Bidder must respond to each of the following statements. Specifications listed are minimum conditions that must be met in order for a bidder to qualify for the award. A "YES" response means the bidder guarantees they can meet this condition. A "NO" response means the bidder cannot meet this condition and will not be considered. "NO & PROVIDE ALTERNATIVE" responses should be used only with a narrative response in the NOTES/COMMENTS section explaining in detail any deviation from the bidder's ability to meet the condition, and an explanation of how this would be determined to be an acceptable alternative to meeting the condition. Alternatives must be detailed in such a way that allows such deviations to be fully evaluated. The State of Nebraska shall determine at its sole discretion whether or not the vendor's alternative is an acceptable alternative.

YES	NO	NO & PROVIDE ALTERNATIVE	3. MATERIAL SPECIFICATIONS, Type 336L
			A. The Model 336L Signal Controller Cabinet and all equipment shall comply with Caltrans TEES dated March 12,2009 or later, (found:http://www.dot.ca.gov/hq/traffops/tech/tees-docs/TEES2009.pdf) and all Errata publications to present date or later http://www.trb.org/publications/pubserrata.aspx) with the following exceptions:
			i. The cabinet shall be furnished with one Model 2010ECLip Monitor Unit or equivalent. **Please specify make and model of conflict monitor:** _____
			ii. The output file #1 shall incorporate a 16 channel Red Monitoring Programming Board wired for Red Circuit Monitoring on all vehicle and pedestrian phases.
			• The Red Monitoring Programming Board shall utilize a 20 pin ribbon cable for connectivity to the Red Monitor interface on the 2010ECLip CMU.
			• The Red Monitoring Programming Board shall be installed on the rear panel of the Output file #1.
			• The Red Monitoring Programming Board shall be accessible for programming without removing the rear panel.
			• Channel programming selects between the Load switch output and AC+.
			• Channel programming shall be accomplished utilizing male jumper plugs.
			• A clear plastic cover shall be installed to protect any contact being made with the Red Monitoring Programming Board.

			iii.The cabinet shall be furnished with a C2P Modem Interconnect Harness connected to a PCB1B ten circuit connector. The PCB1B connector shall be mounted on the input panel and connected to TB1. See attachment A.
			iv. Two mounting brackets, Pelco Products, Inc. part number SE-0126 or equivalent, shall be furnished with each cabinet. **Please specify make and model of mounting brackets:** _____
			B. Cabinet and all equipment shall be listed on the current Caltrans QPL dated March 14, 2013 or later (found: http://www.dot.ca.gov/hq/traffops/tech/qpl/tees_qpl.pdf).
			C. The cabinet shall be furnished with all included Model 204 Flashers and Flash Relays.
			D. Controller unit support shelves in rack (1 unit rack space above pull out drawer).
			E. All plates, brackets, frames, wiring and other components pertaining to the cabinet shall be assembled at the factory.
			F. Required Option: The bottom of the cabinet housing shall be enclosed.
			G. Required Option: 19" rack mount Pull Out Drawer Assembly shall be included and installed above the input file #1. The Drawer shall be capable of supporting a minimum of 50 lbs.
NOTES/COMMENTS:			

YES	NO	NO & PROVIDE ALTERNATIVE	**4. SECRETARY OF STATE REGISTRATION REQUIREMENTS** *Prior to contract award and/or upon request of SPB, potential award recipient(s) will be asked to certify compliance with Nebraska Secretary of State Registration by providing a true and exact copy of current (dated within 90 days) valid Certificate of Good Standing or Letter of Good Standing.
			A. Bidder is a SOLE PROPRIETORSHIP (in which case, no Letter of Good Standing/Certificate of Good Standing is required; complete the Individual or Sole Proprietor United States Attestation form.)
			B. Bidder is a GENERAL PARTNERSHIP (in which case, no Letter of Good Standing/Certificate of Good Standing is required)
			C. Bidder is a FOREIGN or DOMESTIC CORPORATION or BUSINESS and a copy of current Letter of Good Standing/Certificate of Good Standing from the Nebraska Secretary of State **is provided** within bid submission documents.

			D. Bidder is a FOREIGN or DOMESTIC CORPORATION or BUSINESS and a copy of current Letter of Good Standing/Certificate of Good Standing from the Nebraska Secretary of State **will be provided** in a timely manner upon request prior to award.
NOTES/COMMENTS:			

YES	NO	NO & PROVIDE ALTERNATIVE	**5. Bid Compliance**
			A. Specifications have been fully read and fully understood. Any exceptions have been written on the bid or attached.
NOTES/COMMENTS:			

C2P HARNESS WITH TEN CIRCUIT CONNECTOR

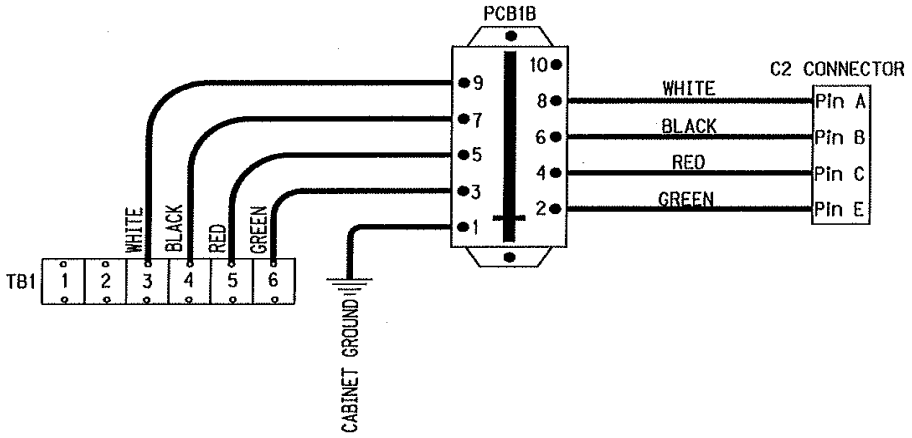

3