ATTACHMENT B

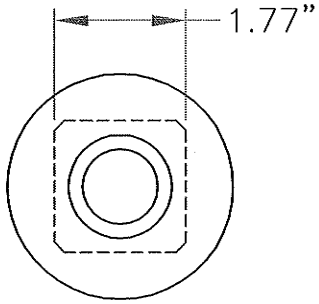

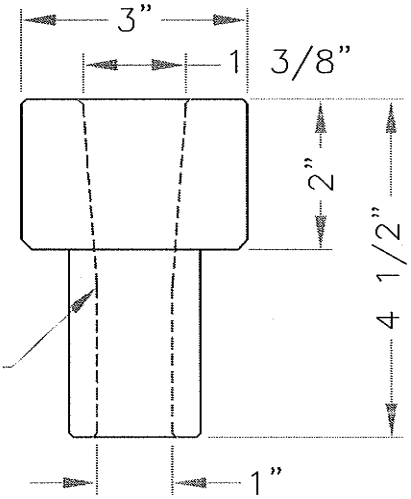

H:\SHUR-TITE\SLIDE HAMMER\SWH05 122210.dwg, 12/22/2010 11:14:47 AM

SHUR-TITE® PRODUCTS P. O. BOX 2283 ROUND ROCK, TEXAS 78680 (512) 218-9500	TYPE: SHUR-FLEX® DRIVER HEAD FOR 2"-12 GA. SQ. TUBE	DRAWN BY: PH	ITEM #: SWH05	
		CHECKED BY: DWH	DATE: 12/22/10	SHEET: 1 OF 1