ATTACHMENT "A"

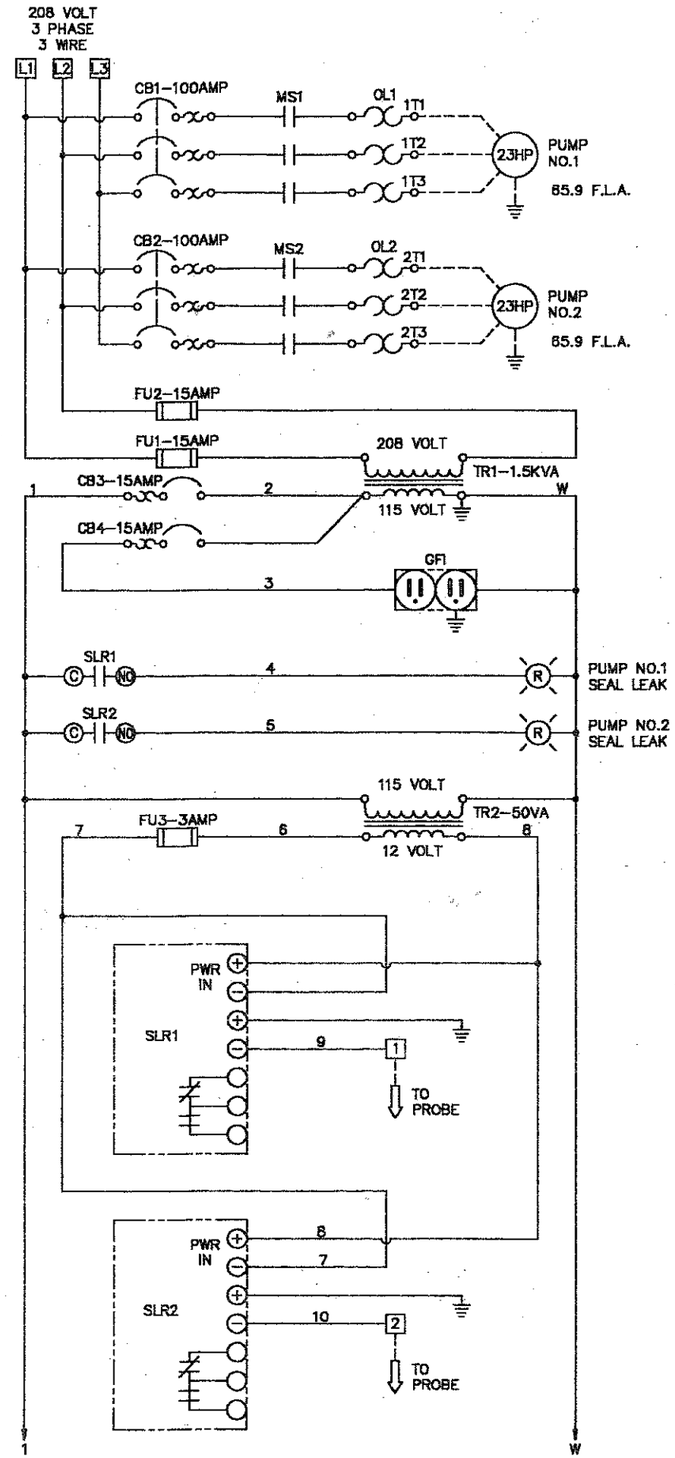

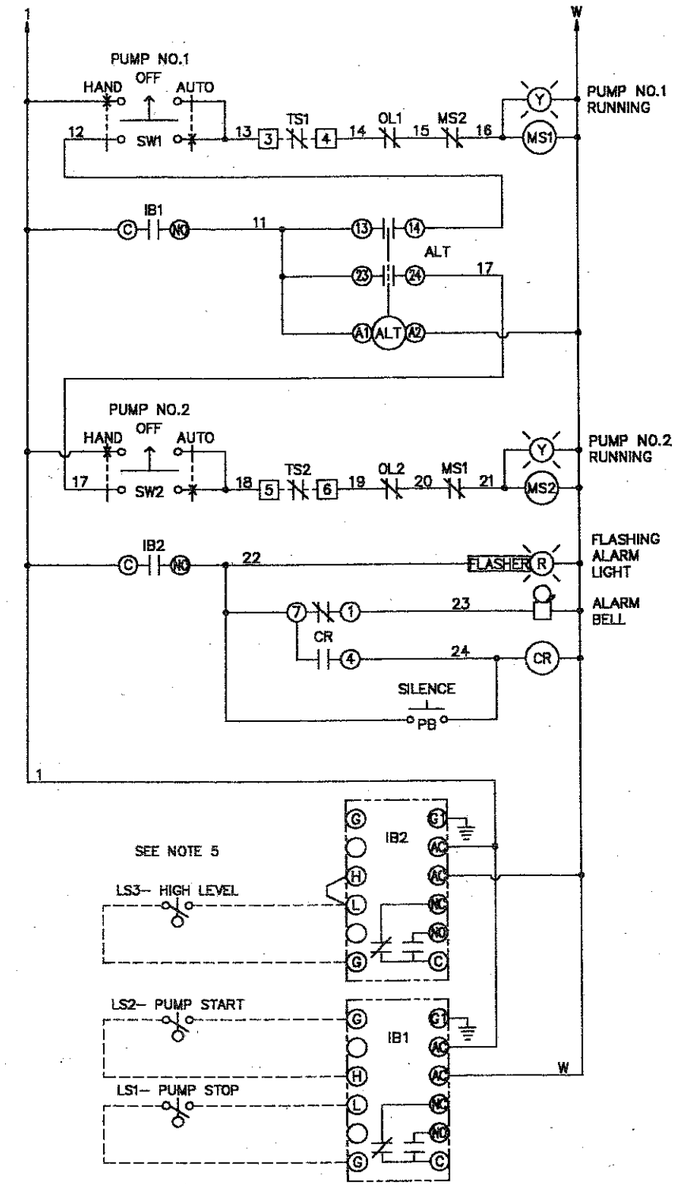

NOTES:
1.) PANEL GROUND TERMINAL MUST BE CONNECTED TO EARTH GROUND.
2.) FACTORY WIRING IS SHOWN ————————
FIELD WIRING IS SHOWN - - - - - - - - -
3.) INSTALLER MUST PROVIDE A MAIN DISCONNECTING DEVICE WITH SHORT CIRCUIT PROTECTION FOR THIS ELECTRICAL ASSEMBLY.
4.) THERMAL SAFETY SWITCH (TS) CONTACTS ARE NOT IN ALL MOTORS. IF MOTOR DOES NOT HAVE SWITCH, THESE TERMINALS MUST BE JUMPERED.
5.) INPUT WIRING TO INTRINSIC SAFE BARRIERS MUST BE SEPARATED BY TWO (2) INCHES FROM ALL OTHER WIRING.

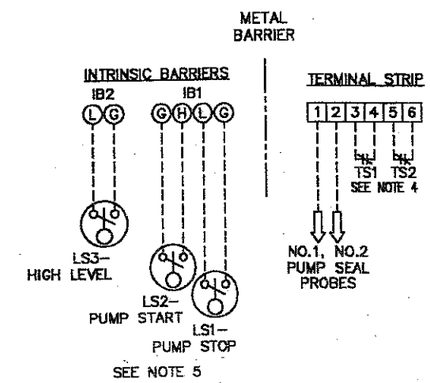

WIRE TYPE	SIZE	COLOR
POWER	4 AWG	BLACK
115V CONTROL	14 AWG	RED
115V NEUTRAL	14 AWG	WHITE
GROUND	14 AWG	GREEN

1 OF 1

Date: 7-3-95

Revision Dates:
1.
2.
3.
4.
5.
6.
7.
8.
9.
10.
11.
12.

CONTROL WORKS INC.
1179 U.S. Highway 50 • Milford, Ohio 45150 • (513) 831-9959

CAMP ASHLAND, NE
DUPLEX PUMP CONTROL PANEL

Power Requirements: 20 HP 65.9 F.L.A. 208 Voltage 3 Phase 60 Hz

Drawn By:	Designed By:	Checked By:	As Built By:	Checked By:
SCOTT JANSSENS	R.A.M.			

Customer:	Job Number:	Drawing Number:
HTM SALES, INC.	CW6103	5-B-4389