State of Nebraska - INVITATION TO BID
ONE TIME PURCHASE

Date	2/26/14	**Page**	1 of 4
Solicitation Number	4644 OF		
Opening Date and Time	03/13/14 2:00 PM		
Buyer	ANNETTE WALTON (AS)		

Return to:
State Purchasing Bureau
1526 K Street, Suite 130
Lincoln, Nebraska 68508
OR
P.O. Box 94847
Lincoln, NE 68509-4847
Telephone: 402-471-6500
Fax: 402-471-2089

DESTINATION OF GOODS
DEPT OF NATURAL RESOURCES
301 CENTENNIAL MALL S FL 4
LINCOLN NE 68508

One Time Purchase to supply and deliver Stream Gage Houses to the State of Nebraska as per the attached specifications.

A response to this Solicitation is subject to, but not limited to, the Standard Terms and Conditions. PLEASE READ CAREFULLY!

IT IS THE RESPONSIBILITY OF THE BIDDER TO REFER TO STATE PURCHASING BUREAU' S WEBSITE FOR ALL INFORMATION RELEVANT TO THIS SOLICITATION TO INCLUDE ADDENDA AND/OR AMENDMENTS THAT MAY BE ISSUED PRIOR TO THE OPENING DATE. <http://www.das.ne.us/materiel/purchasing/purchasing.html>

Bid Tabulations are available on the internet at <http://www.das.state.ne.us/materiel/purchasing/bidtabs.htm>

This form is part of the specification package and must be signed and returned, along with all documents, by the opening date and time specifiied.

Any questions regarding this solicitation must be directed to State Purchasing Bureau, to the attention of the buyer. It is preferred that questions be sent via e-mail to as.materielpurchasing@nebraska.gov <mailto:as.materielpurchasing@nebraska.gov>. Questions may also be sent by facsimile to 402-471-2089. Refer to specification for additional information.

No facsimile or email solicitation responses will be accepted on bids $25,000 and over.

The State may request that payment be made electronically instead of by state warrant. ACH/EFT Enrollment Form can be found at: <http://www.das.state.ne.us/accounting/forms/achenrol.pdf>

The Contractor is required and hereby agrees to use a federal immigration verification system to determine the work eligibility status of employees physically performing services within the State of Nebraska. A federal immigration verification system mean the electronic verification of the work authorization program authorized by the Illegal Immigration Reform and Responsibility Act of 1996, 8 U.S.C. 1324a, known as E-Verify Program, or an equivalent federal program designed by the United States Department of Homeland Security or other federal agency authorized to verify the work eligibility status of a newly hired employee.

The contractor, by signature to this Invitation to Bid, certifies that the contractor is not presently debarred, suspended, proposed for debarment, declared ineligible, or voluntarily excluded by any federal department or agency from participating in transactions (debarred). The contractor also agrees to include the above requirements in any and all subcontracts into which it enters. The contractor shall immediately notify the Department if, during the term of this contract, contractor becomes

No Bid Respond: ( ) Remove From Class-Item OR ( ) Keep Active For Class-Item

BIDDER MUST COMPLETE THE FOLLOWING

DISCOUNT PAYMENT TERMS:_____% _____ DAYS

By signing this Invitation to Bid, the bidder agrees to the "Standard Conditions and Terms of Bid Solicitation and Offer" and is committed to provide a drug free work place environment. Vendor will furnish the items requested within_____ days after receipt of order. Failure to enter Delivery Date may cause quotation to be REJECTED.

Sign Here _____
(Authorized Signature MANDATORY - MUST BE SIGNED IN INK)

Enter Contact Information Below

VENDOR# _____ **Contact** _____
VENDOR: _____ **Telephone** _____
Address: _____ **Facsimile** _____
_____ **Email** _____
_____ _____

State of Nebraska - INVITATION TO BID
ONE TIME PURCHASE

Date	2/26/14	**Page**	2 of 4
Solicitation Number	4644 OF		
Opening Date and Time	03/13/14 2:00 PM		
Buyer	ANNETTE WALTON (AS)		

Return to:
State Purchasing Bureau
1526 K Street, Suite 130
Lincoln, Nebraska 68508
OR
P.O. Box 94847
Lincoln, NE 68509-4847
Telephone: 402-471-6500
Fax: 402-471-2089

DESTINATION OF GOODS

DEPT OF NATURAL RESOURCES
301 CENTENNIAL MALL S FL 4
LINCOLN NE 68508

debarred. The Department may immediately terminate this contract by providing contractor written notice if contractor becomes debarred during the term of this contract.

If the Contractor is an individual or sole proprietorship, the following applies:
1. The Contractor must complete the United States Citizenship Attestation Form, available on the Department of Administrative Services website at: <http://das.nebraska.gov/lb403/attestation_form.pdf>
2. If the Contractor indicates on such attestation form that he or she is a qualified alien, the Contractor agrees to provide the US Citizenship and Immigration Services documentation require to verify the Contractor's lawful presence in the United States using the Systematic Alien Verification for Entitlements (SAVE) Program.
3. The Contractor understands and agrees that lawful presence in the United States is required and the Contractor may be disqualified or the contract terminated if such lawful presence cannot be verified as required by Neb. Rev. Stat. §4-108.

Proprietary Information - Data contained in the Invitation to Bid response and all documentation provided therein, become the property of the State of Nebraska and the data becomes public information upon opening the Invitation to Bid. If the bidder wishes to have any information withheld from the public, such information must fall within the definition of Proprietary Information contained within Nebraska' s Public Records Statutes. All Proprietary Information the bidder wishes the state to withhold must be submitted in a sealed package, which is separate from the remainder of the bid response. The separate package must be clearly marked PROPRIETARY on the outside of the package. Bidders may not mark their entire Invitation to Bid response as proprietary. Bidders cost may not be marked as proprietary information. Failure of the bidder to follow the instructions for submitting proprietary and copyrighted information may result in the information being viewed by other bidders and the public. Proprietary information is defined as trade secrets, academic and scientific research work which is in progress and unpublished, and other information which if released would give advantage to business competitors and serve no public purpose (see Neb. Rev. Stat. §84-712.05(3)). In accordance with Attorney General Opinions 92068 and 97033, bidders submitting information as proprietatry may be required to prove specific, named competitor(s) would be advantaged by release of the information and the specific advantage the competitor(s) would receive. Although every effort will be made to withhold information that is properly submitted as proprietary and meets the State' s definition of proprietary information, the State is under no obligation to maintain the confidentiality of proprietary information and accepts no liability for the release of such information.

Once bids are opened they become the property of the State of Nebraska and will not be returned.
It is understood by the parties that in the State of Nebraska' s opinion, any limitation on the contractor' s liability is unconstitutional under the Nebraska State Constitution, Article XIII, Section III and that any limitation of liability shall not be binding on the State of Nebraska despite inclusion of such language in documents supplied by the contractor' s bid response.
(bl 02/21/14)

A response to this Solicitation is subject to, but not limited to, the included Standard Conditions and Terms. PLEASE READ CAREFULLY!

IT IS THE RESPONSIBILITY OF THE BIDDER TO REFER TO STATE PURCHASING BUREAU'S WEB SITE FOR ALL INFORMATION RELEVANT TO THIS SOLICITATION TO INCLUDE ADDENDA AND/OR AMENDMENTS THAT MAY BE ISSUED PRIOR TO THE OPENING DATE.
http://www.das.state.ne.us/materiel/purchasing/purchasing.html

Bid Tabulations are available on the internet at http://www.das.state.ne.us/materiel/purchasing/bidtabs.htm

This form is part of the specification package and must be signed and returned, along with all documents, by the opening date and time specified.

Any questions regarding this solicitation must be directed to State Purchasing Bureau, to the attention of the buyer. It is preferred that questions be sent via e-mail to matpurch.dasmat@nebraska.gov. Questions may also be sent by facsimile to 402-471-2089. Refer to specification for additional information.

State of Nebraska - INVITATION TO BID
ONE TIME PURCHASE

Date	2/26/14	**Page**	3 of 4
Solicitation Number	4644 OF		
Opening Date and Time	03/13/14	2:00 PM	
Buyer	ANNETTE WALTON (AS)		

Return to:
State Purchasing Bureau
1526 K Street, Suite 130
Lincoln, Nebraska 68508
OR
P.O. Box 94847
Lincoln, NE 68509-4847
Telephone: 402-471-6500
Fax: 402-471-2089

DESTINATION OF GOODS

DEPT OF NATURAL RESOURCES
301 CENTENNIAL MALL S FL 4
LINCOLN NE 68508

No facsimile or email solicitation responses will be accepted on bids $25,000 and over.

INVITATION

Line	Description	Quantity	Unit of Measure	Unit Price	Extended Price
1	STREAM GAGE HOUSE	15.0000	EA	_____	_____

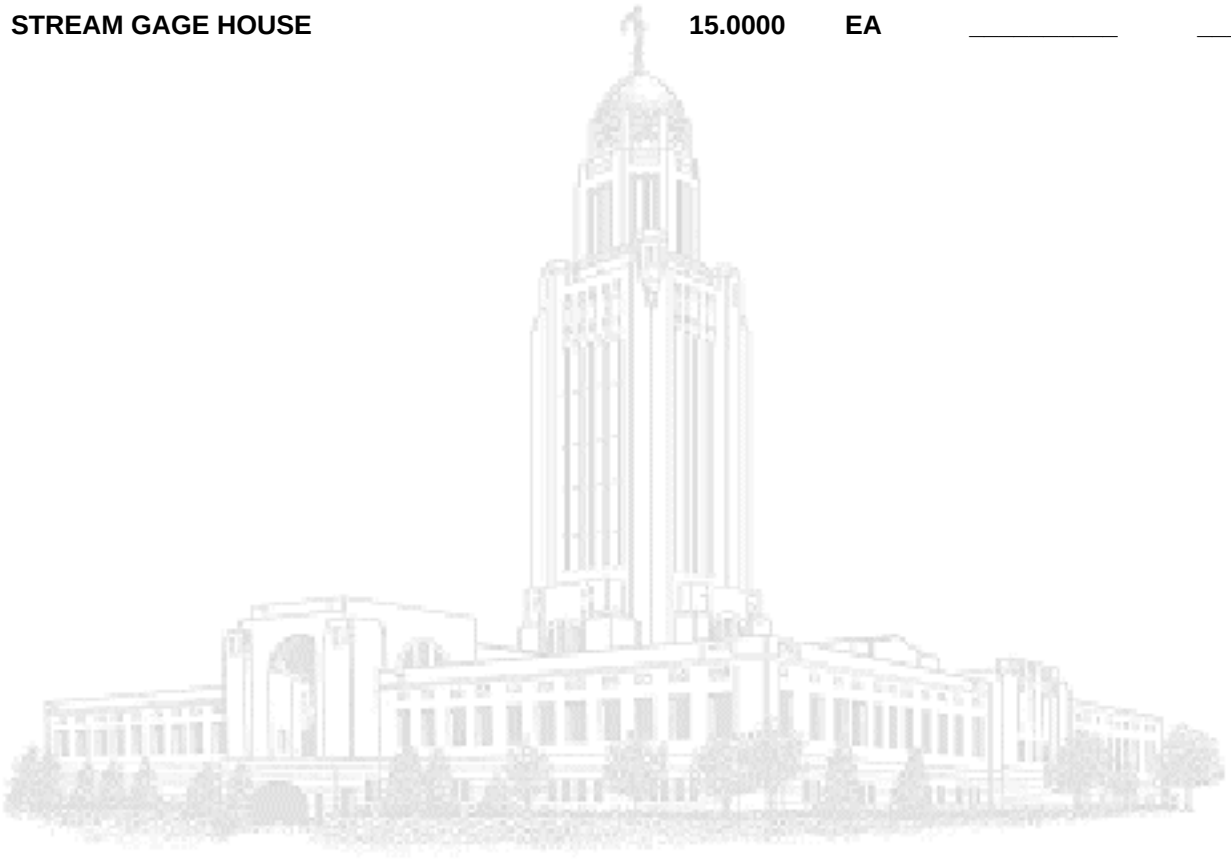

STANDARD CONDITIONS AND TERMS OF BID SOLICITATION AND OFFER Invitations to Bid and Contract Awards

It is the responsibility of the bidder to check the website for all information relevant to this solicitation to include addenda and/or amendments issued prior to the opening date. Website address: http://www.das.state.ne.us/materiel/purchasing/purchasing.htm

SCOPE- These standard conditions and terms of bid solicitation and acceptance apply in like force to this inquiry and to any subsequent contract resulting therefrom.

PRICES- Prices quoted shall be net, including transportation and delivery charges fully prepaid by the bidder, F.O.B. destination named in the Invitation to Bid. No additional charges will be allowed for packing, packages or partial delivery costs. When an arithmetic error has been made in the extended total, the unit price will govern.

EXECUTION- Bids must be signed in ink by the bidder on the State of Nebraska's Invitation to Bid form. All bids must be typewritten or in ink on the State of Nebraska's Invitation to Bid form. Erasures and alterations must be initialed by the bidder in ink. No telephone or voice bids will be accepted. Failure to comply with these provisions may result in the rejection of the bid.

FACSIMILE DOCUMENTS- The State Purchasing Bureau will only accept facsimile responses to Invitations to Bid on bids under $25,000 and up to ten (10) pages. **However, two party sealed bids containing facsimile pages are acceptable.** No direct facsimile solicitation responses will be accepted for a commodity contract.

VALID BID TIME- Bids shall be firm for a minimum of sixty (60) calendar days after the opening date, unless otherwise stipulated by either party in the Invitation to Bid.

DISCOUNTS- Prices quoted shall be inclusive of ALL trade discounts. Cash discount terms of less than thirty (30) days will not be considered as part of the bid. Cash discount periods will be computed from the date of receipt of a properly executed claim voucher or the date of completion of delivery of all items in a satisfactory condition, whichever is later.

PAYMENT- Payment will be made by the responsible agency in conjunction with the State of Nebraska Prompt Payment Act 81-2401 through 2408. The State may request that payment be made electronically instead of by state warrant.

COLLUSIVE BIDDING- The bidder guarantees that the prices quoted have been arrived at without collusion with other eligible bidders and without effort to preclude the State of Nebraska from obtaining the lowest possible competitive price.

LUMP SUM OR ALL OR NONE BIDS- The State reserves the right to purchase item-by-item, by groups or as a total when the State may benefit by so doing. Bidders may submit a bid on an "all or none" or "lump sum" basis but should also submit a bid on an item-by-item basis. The term "all or none" means a conditional bid which requires the purchase of all items on which bids are offered and bidder declines to accept award on individual items; a "lump sum" bid is one in which the bidder offers a lower price than the sum of the individual bids if all items are purchased but agrees to deliver individual items at the prices quoted.

SPECIFICATIONS- Any manufacturer's names, trade names, brand names, information and/or catalog numbers listed in a specification are for reference and not intended to limit competition, but will be used as the standard by which equivalent material offered will be judged. The State Purchasing Director will be the sole judge of equivalency. The bidder may offer any brand which meets or exceeds the specification. When a specific product is required, the Invitation to Bid will so state. Any item bid is to be the latest current model under standard production at the time of order. No used or refurbished equipment will be accepted, unless otherwise stated.

ALTERNATE/EQUIVALENT BIDS- Bidder may offer bids which are at variance from the express specifications of the Invitation to Bid. The State reserves the right to consider and accept such bids if, in the judgement of the State Purchasing Director, the bid will result in goods and/or services equivalent to or better than those which would be supplied in the original bid specifications. Bidders must indicate on the Invitation to Bid the manufacturer's name, number and shall submit with their bid, sketches, descriptive literature and/or complete specifications. Reference to literature submitted with a previous bid will not satisfy this provision. Bids which do not comply with these requirements are subject to rejection. In the absence of any stated deviation or exception, the bid will be accepted as in strict compliance with all terms, conditions and specifications, and the bidder shall be held liable therefore.

SAMPLES- When requested, samples shall be furnished at the bidders expense prior to the opening of the bid, unless otherwise specified. Each sample must be labeled clearly and identify the bidders name, the Invitation to Bid number and the item number. Samples submitted must be representative of the commodities or equipment which would be delivered if awarded the bid. The State of Nebraska reserves the right to request samples even though this may not have been set forth in the Invitation to Bid. Samples not destroyed in testing will be returned at bidders expense, if requested, or will be donated to a public institution.

RECYCLING- Preference will be given to items which are manufactured or produced from recycled material or which can be readily reused or recycled after their normal use as per State Statute Section 81-15,159.

LATE BIDS- All bids will be time and date stamped upon receipt by the State Purchasing Bureau, and this shall be the official time and date of receipt. Bids received after the time of the bid opening will be considered late bids and will be returned to the bidder unopened. The State Purchasing Bureau is not responsible for late bids or lost requests due to mail service inadequacies, traffic or other similar reasons.

BID OPENING- Openings shall be public on the date and time specified on the Invitation to Bid form. It is the bidder's responsibility to assure the bid is delivered at the designated date, time and place of the bid opening. Telephone bids are not acceptable. A bid may not be altered after opening of the bids.

NO BID- If not submitting a bid, respond by returning the Invitation to Bid form explaining the reason in the space provided. Failure to respond to an Invitation to Bid may be cause for the removal of the bidder's name from the mailing list. NOTE: To qualify as a respondent, bidder must submit a "NO BID" and it must be received no later than the stated bid opening date and time.

AWARD- All purchases, leases, or contracts which are based on competitive bids will be awarded to the lowest responsible bidder, determined according to the provisions of State Statute Section 81-161, R.R.S. 1943. The State reserves the right to reject any or all bids, wholly or in part and to waive any deviations or errors that are not material, do not invalidate the legitimacy of the bid and do not improve the bidders competitive position. All awards will be made in a manner deemed in the best interest of the State.

BID TABULATIONS- Tabulations will be furnished upon written request. A self-addressed, stamped envelope which must include the agency and solicitation number must be enclosed. Bid tabulations will not be provided by telephone or facsimile. Bid files may be examined during normal working hours by appointment. Bid tabulations are available on the website at: http://www.das.state.ne.us/materiel/purchasing/bidtabs.htm

PERFORMANCE AND DEFAULT- The State reserves the right to require a performance bond from the successful bidder, as provided by law, without expense to the State. Otherwise, in case of default of the contractor, the State may procure the articles from other sources and hold the contractor responsible for any excess cost occasioned thereby.

IN-STATE PREFERENCE- A resident bidder shall be allowed a preference against a nonresident from a state which gives or requires a preference to bidders from that state. The preference shall be equal to the preference given or required by the state of the nonresident bidders. Where the lowest responsible bid from a resident bidder is equal in all respects to one from a nonresident bidder from a state which has no preference law, the resident bidder shall be awarded the contract**.**

NONDISCRIMINATION- The Nebraska Fair Employment Practice Act prohibits contractors of the State of Nebraska, and their subcontractors, from discriminating against any employee or applicant for employment, to be employed in the performance of such contracts, with respect to hire, tenure, terms, conditions or privileges of employment because of race, color, religion, sex, disability, or national origin. (State Statute Sections 48-1101 through 48-1125) The bidder guarantees compliance with the Nebraska Fair Employment Practice Act, and breach of this provision shall be regarded as a material breach of contract. The contractor shall insert a similar provision in all subcontracts for services to be covered by any contract resulting from this Invitation to Bid.

TAXES- Purchases made by the State of Nebraska are exempt from the payment of Federal Excise Taxes, and exemption certificates will be furnished on request. State and local taxes are exempt by State Statute Section 77-2704 (l) (m) R.R.S. 1943 and must not be included in the bid prices. Exemption by statute precludes the furnishing of State exemption certificates.

DRUG POLICY - Bidder certifies that it maintains a drug free work place environment to ensure worker safety and workplace integrity. Contractor agrees to provide a copy of its drug free workplace policy at any time upon request by the State.

NE ACCESS TECHNOLOGY STANDARDS- Vendor agrees to ensure compliance with Nebraska Access Technology Standards. See website at: http:/www.nitc.state.ne.us/standards/accessibility/

Revised: 02/2004

STATE OF NEBRASKA
STATE PURCHASING BUREAU

SCHEDULE OF EVENTS

The State expects to adhere to the tentative procurement schedule shown below. It should be noted, however, that some dates are approximate and subject to change.

	ACTIVITY	DATE/TIME
1	Release Invitation to Bid	February 26, 2014
2	Last Day to Submit Written Questions	March 5, 2014
3	State Responds to Written Questions Through an Addendum to be posted to the internet at: http://www.das.state.ne.us/materiel/purchasing/rfp.htm	March 6, 2014
4	Bid Opening Location: Nebraska State Purchasing Bureau 1526 K St. Suite 130 Lincoln, NE 68508	March 13, 2014 2:00 p.m. Central Time

WRITTEN QUESTIONS AND ANSWERS

Any explanation desired by a bidder regarding the meaning or interpretation of any Invitation to Bid provision must be submitted in writing to the State Purchasing Bureau and clearly marked "ITB Number 4644 OF; Stream Gage Houses". It is preferred that questions be sent via e-mail to as.materielpurchasing@nebraska.gov Questions may also be sent by facsimile to 402-471-2089, but must include a cover sheet clearly indicating that the transmission is to the attention of Annette Walton, showing the total number of pages transmitted, and clearly marked "ITB Number 4644 OF; Stream Gage Houses".

Written answers will be provided through an addendum to be posted on the internet at http://www.das.state.ne.us/materiel/purchasing/rfp.htm **on or before the date shown in the Schedule of Events.**

STATE OF NEBRASKA
One-Time Purchase

Department of Natural Resources
Stream Gage House
Specifications
4644 OF

SCOPE
It is the intent of this Invitation to Bid to establish a one-time purchase to supply fifteen (15) stream gage houses (stainless steel enclosed boxes) per the attached specifications.
The stream gage houses shall be manufactured in compliance with specifications documented below and meet the National Electrical Manufacture Association (NEMA) standard rating 4X (http://www.nema.org/Products/Documents/nema-enclosure-types.pdf). Complete detailed drawings or photographs should be attached to the quotation for the stream gage house being proposed. Any information necessary to show compliance with these specifications should be supplied in writing and attached to the bid proposal. The stream gage houses must meet or exceed the following requirements.

Complete specifications, manufacturer's descriptive literature and/or advertising data sheets with cuts or photographs may be required prior to an award and should be included with the bid on the IDENTICAL items proposed. Literature should be complete and the latest published. Any information necessary to show compliance with these specifications not given on the manufacturer's descriptive literature and/or advertising data sheets should be supplied in writing on or attached to the bid document. If manufacturer's specifications sheets, descriptive literature, advertising data sheets or information necessary to show compliance with these specifications is not supplied in writing on or attached to the bid document, the bidder will be required to submit requested information within three (3) business days of a written request. Failure to submit requested descriptive literature or advertising data sheets may be grounds to reject the bid.

NON-COMPLIANCE STATEMENT
Read these specifications carefully. Any and all exceptions to these specifications must be written on or attached to quotation request. Any noncompliance may void your quotation. Non-compliance to any single specification can void your bid.

It is the responsibility of Bidders to obtain information and clarifications as provided below. The State of Nebraska is not responsible for any erroneous or incomplete understandings or wrongful interpretations of this Invitation to Bid by any Bidder.

No interpretation related to the meaning of bid specifications or other pre-bid documents will be made orally to any Bidder by the State of Nebraska. Any request for bid interpretation must be put in writing and faxed by the Bidder to: the State Purchasing Bureau, Fax (402) 471-2089 or e-mailed to AS Materiel Purchasing as.materielpurchasing@nebraska.gov by the last day to submit written questions that is specified in the Schedule of Events. (Inquiries received after the last day to submit written questions may not be addressed).

RIGHTS
The State reserves the right to waive technicalities; reject any or all bids, wholly or in part; and to waive any deviations or errors that are not material, do not invalidate the legitimacy of the bid, and do not improve the bidder's competitive position. This contract may be awarded item-by-item, group of items, or total, to best serve the interest of the State of Nebraska. The State of Nebraska will be the sole judge of equivalence and any decision will be final. All awards will be made in a manner deemed in the best interest of the State.

SECRETARY OF STATE
Contract or purchase order awards may be limited to bidders authorized to transact business in the State of Nebraska. All awarded bidders are expected to comply with all Nebraska Secretary of State registration requirements. It is the responsibility of the bidder to comply with any registration requirements pertaining to types of business entities (e.g. person, partnership, foreign or domestic limited liability company, association, or foreign or domestic corporation or other type of business entity). The bidder who is the expected recipient of an award recommendation will be required to certify that it has so complied and produce a true and exact copy of its current (dated within 90 days), valid Certificate of Good Standing or Letter of Good Standing; or in the case registration is not required, to provide, in writing, the reason as to why none is required. This must be accomplished prior to the award of the contract or purchase order. Further, all bidders shall comply with any and all other applicable Nebraska statutes regarding transacting business in the State of Nebraska. In order to expedite the award process, bidders are encouraged to submit their valid Certificate of Good Standing or Letter of Good Standing with their bid.

AWARD
All purchases, leases, or contracts which are based on competitive bids will be awarded to the lowest responsible bidder, determined according to the provision of State Statute Section 81-161, R.R.S 1943. The State reserves the right to reject any or all bids, wholly or in part and to waive any deviations or errors that are not material, do not invalidate the legitimacy of the bid and do not improve the bidder's competitive position. All awards will be made in a manner deemed in the best interest of the State.

TAXES
The State is not required to pay taxes of any kind and assumes no such liability as a result of this solicitation. Any property tax payable on the contractor's equipment which may be installed in a state-owned facility is the responsibility of the contractor.

PRICES
Price quoted shall be unit price and shall be firm for 90 days from date of an award and are to be net; including transportation and delivery charges fully prepaid by the bidder F.O.B. Destination as specified. No additional charges will be allowed for packing, handling, fuel surcharge, or partial delivery costs.

QUALITY
Product quality must meet specifications and be consistent. A guarantee of satisfactory performance by the supplier and meeting delivery dates are considered to be an integral part of the purchase resulting from this Invitation to Bid. All materials must be of first quality, under standard production by the manufacturer and be of standard design, complete as regularly advertised and marketed and be of proven performance. Products are to be fully guaranteed and may be returned for full credit or replacement (at the State's option) for any reason and for the duration of the contract with no additional charges for shipping or restocking.

SUBSTITUTIONS
Vendor will not substitute any item that has been awarded without prior written approval of State Purchasing Bureau.

DELIVERY
Delivery ~ All Deliveries Statewide

Between 9:00 AM and 3:00 PM, daily, Monday through Friday excluding state holidays. Delivery desired prior to 60 days after receipt of purchase order; deliveries quoted beyond 60 days are an award consideration. Vendor must notify Jim Marburger 48 hours prior to delivery at (402) 471-0573 or 2363. Department of Natural Resources' stream gage houses will be delivered to its three field offices at the addresses below.

Delivery Quantity and Locations:

10 units to:
Cambridge Field Office
622 Patterson St
Cambridge, NE 69022
Ph: 308-697-3730

3 units to:
Lincoln Field Office
301 Centennial Mall South
Lincoln, NE 68509
Ph: 402-471-3005

2 units to:
Norfolk Field Office
601 East Benjamin Ave. Suite 101
Norfolk, NE 68701
Ph: 402-370-3377

Delivery personnel will be required to deliver and off load all products to specified field office locations. Vendor's delivery personnel must wait for the order to be received, invoice(s) / packing slip(s) verified and signed with discrepancies (shortages, longs, damage, etc.) documented on the delivery invoice. Deliveries must be clearly marked with the purchase order number.

At the time of delivery, a designated State of Nebraska employee will sign the invoice/packing slip. This signature will only indicate that the order has been received and that the items actually delivered agree with the delivery invoice. This signature does not indicate all items were received in good condition and/or that there is not possible hidden damage.

PAYMENT
Payment will be made in conjunction with the State of Nebraska Prompt Payment Act §81-2401 through 2408. Payment shall be within 45 days of receipt of service or invoice, whichever is received later. Payment will be made by the responsible agency in compliance with the State of Nebraska Prompt Payment Act (See Neb. Rev. Stat. §81-2401 through 81-2408). The State may require the vendor to accept payment by electronic means such as ACH deposit. In no event shall the State be responsible or liable to pay for any services provided by the vendor prior to the Effective Date, and the vendor hereby waives any claim or cause of action for any such services.

REFERENCES
The State of Nebraska reserves the right to check any reference(s) regardless of source of the reference information, including but not limited to, those that are identified by the company in the bid, those indicated through explicitly specified contracts, those that are identified during the review of the bid, or those that result from communication with other entities involved with similar projects.

List the name, addresses, and the telephone numbers of three companies/businesses that we may contact who are currently using the same or similar equipment being bid for the same or similar application.

1._____

2._____

3._____

CUSTOMER SERVICE
The vendor shall list the name and phone number of the customer service representative who will be assigned to service the State of Nebraska's account:

Customer Service Representative: _____

Phone Number: _____

Fax Number: _____

E-mail Address: _____

Stream Gage House Specifications
Bidder Instructions
4644 OF

BIDDER INSTRUCTIONS

Bidder must respond to each of the following statements. Specifications listed are minimum conditions that must be met in order for a bidder to qualify for the award. A "YES" response means the bidder guarantees they can meet this condition. A "NO" response means the bidder cannot meet this condition and will not be considered. "NO & PROVIDE ALTERNATIVE" responses should be used only with a narrative response in the NOTES/COMMENTS section explaining in detail any deviation from the bidder's ability to meet the condition, and an explanation of how this would be determined to be an acceptable alternative to meeting the condition. Alternatives must be detailed in such a way that allows such deviations to be fully evaluated. The State of Nebraska shall determine at its sole discretion whether or not the vendor's alternative is an acceptable alternative.

YES	NO	NO & PROVIDE ALTERNATIVE	1. Specifications
			A. Free Standing Enclosure
			B. Stainless Steel Gauges 12 GA
			C. 72" H x 30" W x 24" D – refer to Attachments A-C (Shelf inside gage house is NOT required)
			D. Continuous Hinged Door
			E. Pad-lockable Handle
			F. Lifting Eyes
			G. 2 Pre-punched Holes (size & location noted on Attachment A)
			H. Constructed to NEMA 4X Standards : http://www.nema.org/Products/Documents/nema-enclosure-types.pdf
NOTES/COMMENTS:			

YES	NO	NO & PROVIDE ALTERNATIVE	**2. Secretary of State Registration Requirements** *Prior to contract award and/or upon request of SPB, potential award recipient(s) will be asked to certify compliance with Nebraska Secretary of State Registration by providing a true and exact copy of current (dated within 90 days) valid Certificate of Good Standing or Letter of Good Standing.
			A. Bidder is a SOLE PROPRIETORSHIP (in which case, no Letter of Good Standing/Certificate of Good Standing is required)
			B. Bidder is a GENERAL PARTNERSHIP (in which case, no Letter of Good Standing/Certificate of Good Standing is required)
			C. Bidder is a FOREIGN or DOMESTIC CORPORATION or BUSINESS and a copy of current Letter of Good Standing/Certificate of Good Standing from the Nebraska Secretary of State **is provided** within bid submission documents.
			D. Bidder is a FOREIGN or DOMESTIC CORPORATION or BUSINESS and a copy of current Letter of Good Standing/Certificate of Good Standing from the Nebraska Secretary of State **will be provided** in a timely manner upon request prior to award.
NOTES/COMMENTS:			

YES	NO	NO & PROVIDE ALTERNATIVE	**3. Bid Compliance**
Specifications have been fully read and fully understood. Any exceptions have been written on the bid or attached.			
NOTES/COMMENTS:			

ATTACHMENT "A"

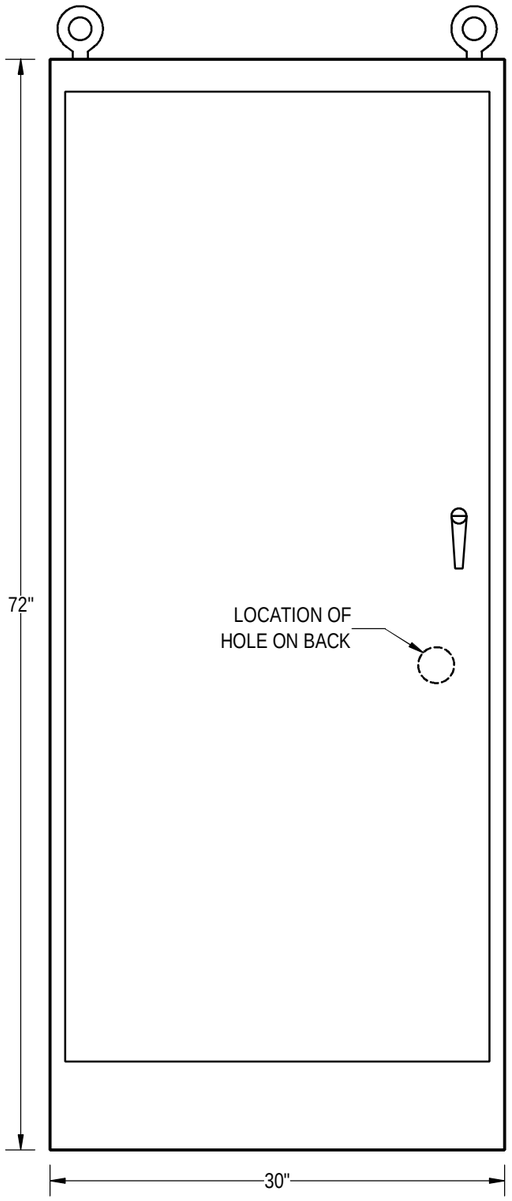

FRONT

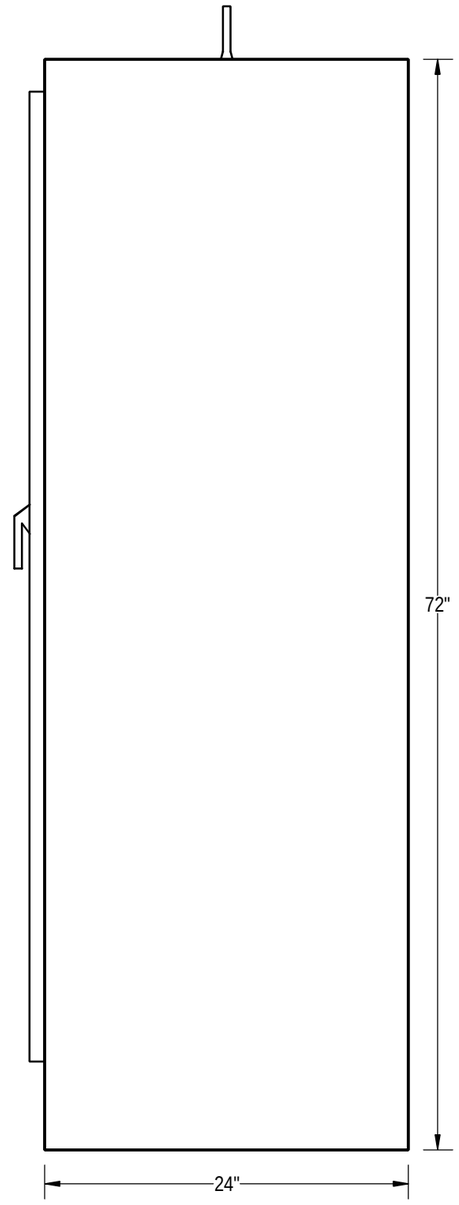

SIDE

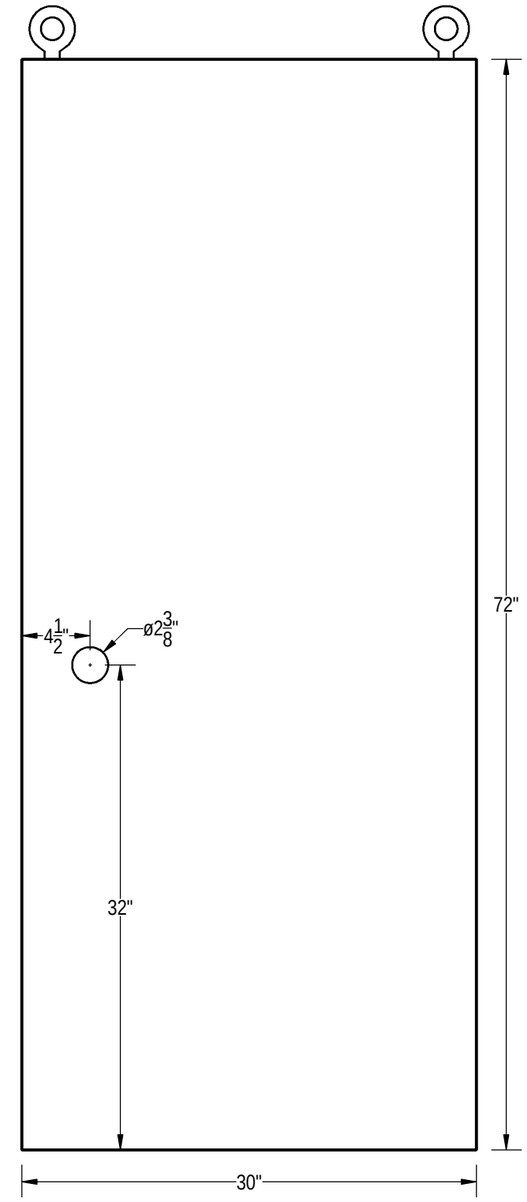

BACK

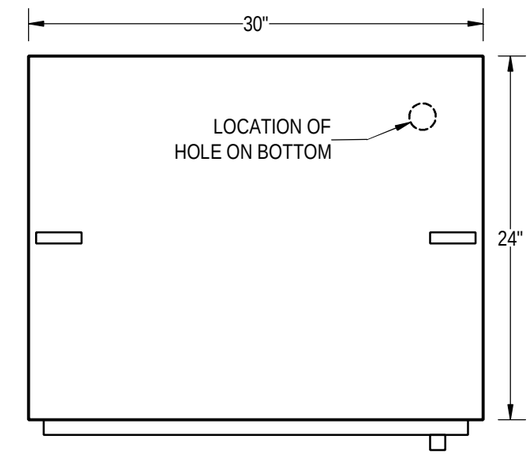

TOP

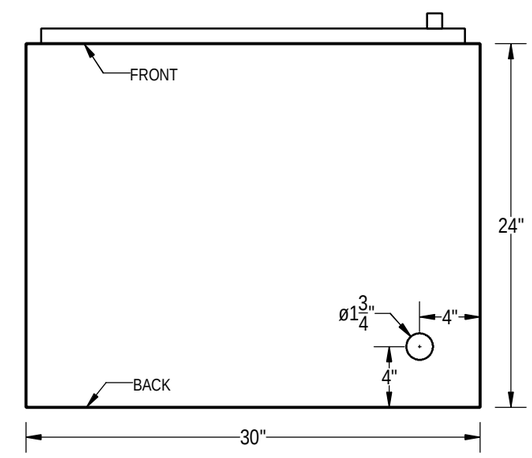

BOTTOM

Nebraska Department of Natural Resources	GAGE HOUSE SKETCH	Drawn by C. LESMEISTER 1-22-14 Approved by S. STANTON 1-23-14

ATTACHMENT "B"

ATTACHMENT "C"